NAMIBIA UNIVERSITY OF SCIENCE AND TECHNOLOGY

Contemporary Domesticity and the Architecture of Urbanising Northern Namibia: The Case of the Owambo Homestead

Elao Benjamin Martin

Dissertation submitted in fulfilment of the requirements for the Doctorate degree in Spatial Science: Architecture, at the Namibia University of Science and Technology

Supervisor: Prof Sampson Umenne

Namibia University of Science and Technology

Co-Supervisors:

Dr Finzi Saidi

Dr Guillermo Delgado

February 2026

Declaration

I, *Elao B Martin*, hereby declare that the work contained in the thesis entitled: *Contemporary Domesticity and the Architecture of Urbanising Northern Namibia: The Case of the Owambo Homestead* is my own original work and that I have not previously in its entirety or in part submitted to any university or higher education institution for the award of a qualification.

Signature:  Date: Feb 2026

Retention and Use of Thesis (Optional)

I, *Elao B Martin*, being a candidate for the degree of *Doctor of Philosophy in Spatial Science: Architecture,* accept the requirements of the Namibia University of Science and Technology relating to the retention and use of theses deposited in the Library and Information Services.

In terms of these conditions, I agree that the original of my thesis deposited in the Library and Information Services will be accessible for purposes of study and research, in accordance with the normal conditions established by the Librarian for the care, loan or reproduction of theses.

Signature:  Date: Feb 2026

Table of Contents

LIST OF FIGURES ..... **VIII**

LIST OF TABLES ..... **XII**

GLOSSARY OF VERNACULAR TERMS ..... **XIII**

LIST OF ACRONYMS ..... **XIV**

ACKNOWLEDGEMENTS **18**

ABSTRACT **20**

CHAPTER 1: INTRODUCTION **21**

1.1 Background 21

1.2 Problem Statement 24

1.3 Research Questions 25

1.4 Research Objectives 25

1.5 Significance and Contributions of the Study 25

1.6 Thesis Structure 26

CHAPTER 2: LITERATURE REVIEW **28**

2.1 Introduction 28

2.2 Correlation of modern urban form to 'development' in northern Namibia 29

2.3 Pre-colonial to Post-colonial development of urban areas 34

2.4 The domesticity of home spaces 41

2.5 Theoretical framework 43

2.6 Theoretical tensions and methodological mediation 50

2.7 Summary of Literature Review 51

CHAPTER 3: INTERSECTION OF LAND, HOUSING AND SOCIO-SPATIAL PRACTICES AT THE NEXUS **53**

3.1 Introduction 53

3.2 Namibia's Spatial History, Pre-colonial to colonial 53

3.3 Pre-colonial spatial planning and governance in north-central Namibia 56

3.4 Historical Landscape of Spatial Practice and Occupation in Outapi-Ombalantu 60

3.5 Land reform efforts 63

3.6 Land Markets 66

3.7 Access to communal land rights 67

3.8 Compensation for Communal Land 68

3.9 Rights over common resources on communal land 70
3.10 Traditional Authorities and Indigenous Spatial Practices Today 72
3.11 Housing and Land Practice: Communal Land versus Urban Land 72
3.12 Summary 75

CHAPTER 4: METHODOLOGY 79

4.1 Introduction 79
4.2 The researcher's positionality 79
4.3 Selection of study area 81
4.4 Relating questions to theory and methods 85
4.5 Customary practice and codes of conduct in research methods 87
4.6 Data Collection 88
4.6.1 Ethnography through participant observation 88
4.6.2 Narrative Interviews 90
4.6.3 Document Analysis 90
4.6.4 Typomorphological Survey 90
4.7 Data Analysis 92
4.8 Ethical Considerations 93
4.9 Limitations 94
4.10 Summary 96

CHAPTER 5: FINDINGS AT THE OMBALANTU-OUTAPI NEXUS 98

5.1 Introduction to findings 98
5.2 How the homestead on communal land is established 98
5.3 Spaces in the homestead and their meanings 107
5.4 Typomorphological Survey 115
5.4.1 Spatial change in the homesteads 119
5.4.2 Survey findings 123
5.4.3 Core Variables of Change 125
5.5 Everyday life in homesteads within the case 129
5.5.1 Introduction to the observations of everyday life in the homesteads 129
5.5.2 Case 1: The homestead in communal land, Ohamautsi - Incremental upgrades and claims to communal land. 132
5.5.3 Case 2: The upgraded urban homestead – Persistent spatial logics. 148
5.5.4 Case 3: The urban homestead as a case for alternative urban livelihood strategies, Outapi. 157
5.5.5 Case 4: The Reestablished Homestead on other Communal Land – Post compensation and relocation 164

5.5.6 Case 5: The Homestead as access to land and housing markets 173
5.6 CODING THEMES FROM THE OBSERVATIONS AND NARRATIVE INTERVIEWS 178
REFLECTIONS ON THE LIMITATIONS OF AUTOETHNOGRAPHY ON THE FINDINGS 190
5.7 190

CHAPTER 6: DISCUSSION – INTERPRETING THE FINDINGS THROUGH ASSEMBLAGE 193

6.1 INTRODUCTION 193
6.2 DISCUSSION ON THE FIRST RESEARCH QUESTION 195
6.3 DISCUSSION ON THE SECOND RESEARCH QUESTION - THE TERRITORIALIZATION AND DETERRITORIALIZATION OF THE NEXUS ASSEMBLAGE 198
6.4 DISCUSSION ON THE THIRD RESEARCH QUESTION - IMPLICATIONS FOR THE POLICY GUIDELINES FOR COMPENSATION 203

CHAPTER 7: CONCLUSIONS AND RECOMMENDATIONS 211

7.1 INTRODUCTION 211
7.2 REVISITING THE OBJECTIVES AND THEORETICAL UNDERPINNINGS 211
7.2.1 How do residents adapt or reconstruct domesticity and architectural forms when their homesteads encounter the communal urban nexus? 212
7.2.2 In what ways are spatial characteristics retained, negotiated, or abandoned under new housing and urban land tenure arrangements? 212
7.2.3 What does this adaptation of domesticity and architecture reveal about the tensions of planning and compensation systems in Namibia? 213
7.3 SUMMARY OF THEORETICAL CONTRIBUTIONS 214
7.4 SUMMARY OF EMPIRICAL CONTRIBUTION 214
7.5 RECOMMENDATIONS 215
7.5.1 Policy and Framework Recommendations 215
7.5.2 Spatial Recommendation: Integrating Communal Domesticity into Urban Planning through a concept of Transitional Zoning 217
7.6 AREAS FOR FURTHER RESEARCH 220

APPENDICES 240

MAP 1: LOCAL AUTHORITY SCHEME BOUNDARY 241
MAP 3: MORPHOLOGICAL OVERLAY – HOMESTEADS IN PROCLAIMED AREA PRE 2003 243
MAP 4: MORPHOLOGICAL OVERLAY – HOMESTEADS IN PROCLAIMED AREA PRE 2003 AND CADASTRAL LAYOUT POST 2013 244
TYPOMORPHOLOGICAL SURVEY ANALYSIS 245
COUNCIL MINUTES 292

PUBLIC INPUTS ON THE COMPENSATION POLICY FOR COMMUNAL LAND..... 294
SAMPLE CONSENT FORM..... 310
CONSENT FROM THE TRADITIONAL AUTHORITY 314

List of Figures

Figure 1: Ruins left behind after a homestead received compensation to relocate to another area of communal land. Outapi, Northern Namibia 23
Figure 2: A conceptual image of the communal urban nexus and the themes covered in the literature review. Source: Author 28
Figure 3: Sketch adapted from the Town Plan of Reitz, Transvaal, South Africa, 1951. Map showing zoning. The 'Native Location' is indicated in the centre bottom of the plan, separated from the 'European Residential' zone by a buffer strip. Source: Author 31
Figure 4: Sketch adapted from the drawings of settlement patterns in Owamboland by Mills (1983). Source: Author. 36
Figure 5: Sketch map of north central Namibia showing the area known as Owamboland, overlaying the Owambo subgroup boundaries recorded in 1937 (NAN, 1937), 1948 (Loeb, 1962) and 1971 (Department of Foreign Affairs, 1974). Source: Author 56
Figure 6: The north central region of Namibia known as Owamboland comprising the administrative regions of Omusati, Oshana, Oshikoto, and Ohangwena 57
Figure 7: The administrative regions of Owamboland in north central 58
Figure 8: Outapi population trend over time: Source: 2011 Population census, Namibia Statistics Agency 61
Figure 9: An aerial map of the town of Outapi. Key areas and main roads are marked, including the area of Onakayale, which is an area of communal land with homesteads recently annexed to be part of the town. 62
Figure 10: Conceptual diagram by the author outlining the research focus across the context, case, themes and theory. 81
Figure 11: Two aerial photographs from 2010 (top), and 2020 (bottom) showing some of the changes which occurred in and around the homesteads in the study area of Onakayale (Source: NSA). 84
Figure 12: The coding of the typomorphological survey showing the spatial depth diagram at the centre, and the proximity relationships on the right. 92
Figure 13: Booklet with the record of yearly payment of newly established homestead in the Ombalantu communal land area to the Ombalantu Traditional Authority. The stamp dated 2019 shows a payment of N$160.00 paid to the TA 100
Figure 14: Conceptual sketch showing the identification and marking of the area allocated to a new homestead 101

Figure 15: Conceptual sketch showing the overlaying spatial logic of the homestead from puplic to private considering the entrance, orientation of entrance, and thresholds. 102
Figure 16: Conceptual sketch showing the demarcation of gendered spaces in the homestead particularly the epata space, and the oshoto space. 103
Figure 17: Conceptual sketch showing the emergence of rooms as spatial needs emerge in the homestead. 104
Figure 18: Conceptual sketch showing the addition of individual sleeping rooms to cater to the growin number of people in the homestead. These rooms follow the spatial logic of the homestead with regards to privacy and gendering. 105
Figure 19: Image outlining the people in the homestead. Source: Author 107
Figure 20: A recently built ondjuwo space with modern construction material. 110
Figure 21: Typical layout of a Owambo homestead in the Ombalantu communal area 113
Figure 22: Typical section through a homestead in the Ombalantu communal area. 114
Figure 23: Aerial photograph of the selected communal homesteads in Outapi in 2003. 116
Figure 24: Aerial photograph of the selected communal homesteads (now proclaimed Urban land) in the Outapi in 2023. 117
Figure 25: Aerial photograph showing the selected homesteads for the typomorphological survey showing homesteads in the Ombalantu communal area. The image above shows captures the area in 2003, the image below in 2023 118
Figure 26: A garden of papaya and lemon fruit trees in homestead 06 on urban land in the Onakayale area 120
Figure 27: Granaries in homestead 05 on urban land in the Onakayale area 120
Figure 28: Sketch by person living in a homestead of the homestead before it was upgraded to the urban standard after proclamation of communal land to urban land (Onakayale, Outapi, homestead 05) 120
Figure 29: Sketch by person living in a homestead of the homestead after it was upgraded to the urban standard after proclamation of communal land to urban land (Onakayale, Outapi, homestead 05) 120
Figure 30: Sample of analysis of homesteads on Outapi proclaimed urban land after 2011. The analysis focuses on the spatial structure of the homesteads between the years 2003 to 2023 121
Figure 31: Sample of analysis of homesteads in the Ohamautsi area of communal land 2km east of Outapi. The analysis focuses on the spatial structure of the homesteads between the years 2003 to 2023 122
Figure 32: Typomorphological analysis of homestead on urban land between 2003 (left), and 2023 (right) 123

Figure 33: Typomorphological analysis of a homestead on communal land between 2003 (left), and 2023 (right)....124
Figure 34: Aerial photograph of Outapi. Source: Google Earth....130
Figure 35: Aerial photograph of Outapi, with diagrammatic annotations. Source: Author....131
Figure 36: Reference aerial photograph of Tk Shilongo's homestead on communal land. Source: Google earth....134
Figure 37: Reference aerial photograph of Tk Shilongo's homestead with annotations. Source: Author134
Figure 38: Detailed floor plan layout of TK Shilongo's homestead on communal land. Source: Author .140
Figure 39: Detailed drawing of Tk Shilongo's homestead on communal land with spatial references. Source: Author....142
Figure 41: Schematic spatial setup of the homestead....150
Figure 42: Section through Mk Iipinge's homestead on urban land, not to scale. Source: Author....152
Figure 43: Detailed drawing of Mk Iipinge's homestead on proclaimed urban land with spatial references. Source: Author....154
Figure 45: Meme Frieda's homestead showing the entrance and the residential development of Outapi. The area in front of her homestead is an additional erf she has been awarded as per the compensation guidelines for communal land.... **Error! Bookmark not defined.**
Figure 46: Detailed drawing of Meme Frieda's homestead on urban land with spatial reference notes. Source: Author....161
Figure 48: Schematic spatial layout of Meme Rosaria's reestablished homestead on communal land ..165
Figure 49: The kraal used by the reestablished homestead to keep goats and sheep for subsistence farming....166
Figure 50: The perimeter wall of the reestablished homestead constructed with corrugated metal sheets 166
Figure 51: A view out of the reestablished homestead (right), with the cuca shops and some informal housing in the distance....166
Figure 53: The veranda leading into the head of the homestead's room in the reestablished homestead 167
Figure 54: section through Meme Rosaria's homestead on communal land, not to scale. Source: Author 168
Figure 55: Sketch from memory by a resident in a reestablished homestead showing the layout of the homestead before it was relocated to another area of communal land....169

Figure 56: Sketch by the same resident as Figure 55showing the layout of the homestead as it is now after being reestablished in another area of communal land. 169
Figure 57: Detailed drawing of Meme Rosaria's homestead on urban land with spatial reference notes. Source: Author 170
Figure 58: Early concept sketch outlining and recording some of Ndina's intentions with her homestead. Source: Author 174
Figure 59: Concept diagram showing the conceptual master plan layout of Ndina's homestead. The spatial layout also shows areas for future expansions. Source: Author 176
Figure 60: Image showing the recently completed north facing structure in Ndina's homestead. Source: Author 177
Figure 61: Extracted in vivo codes (initial coding) from the narrative interviews in a messy arrangement 183
Figure 62: Contextualization and generating relationships between codes (initial coding) using the in vivo codes extracted from the narrative interviews 184
Figure 63: Diagram conceptualizing the territorialisation of communal land networks featuring Tk Shilongo's homestead as a unit within. 201
Figure 64: Diagram conceptualizing the territorialisation of urban land networks featuring Meme Frieda's homestead as a unit within. 202
Figure 63: Mind map analysis of the inputs on the review of the guidelines for the compensation of communal land. Source: Author.....205
Figure 65:Mind map analysis of the inputs on the review of the guidelines for the compendation of communal land Source: Author.....205
Figure 66: Image showing the different route to urban land tenure for the different categories of people in the homestead. This schematic reveals a tension in collective vs individual land rights 207
Figure 59: Mind map analysis of the inputs on the review of the guidelines for the compensation of communal land. Source: Author..... **Error! Bookmark not defined.**

List of Tables

Table 1: A coded analysis of media narratives linking town proclamation to “development” in northern Namibia. 33

Table 2: Grounded-theory synthesis of the principal socio-spatial categories within the Owambo homestead 111

Table 3: Comparative matrix comparing the changes in the communal and urban homesteads across core variables of change..... 126

Table 4: Preliminary coding summary of recurring spatial elements and relations in relationship diagrams 127

Table 5: Table showing the themes and codes from the focused coding exercise. 185

Table 6: Table showing proposed ammendments to the existing town planning scheme required for a Transitional Homestead Zone. 218

Glossary of vernacular terms

Term	Meaning/Use
Aawambo	The related group of people of Bantu ethnicity comprising many subgroups who inhabit the area of central northern Namibia and Southern Angola and speak related languages of Oshiwambo.
Ehale	A large open area or space in the homestead.
Epata	A food preparation space in the homestead comprised of enclosed and outside cooking areas, storage areas and seating spaces.
Meme	A respectful form of address for a woman.
Memekulu (Mk)	A respectful form of address for an elderly woman.
Omikala	Meandering corridors in the homestead used to control movement through the homestead.
Ondjuwo	A sacred room built for weddings and childbirth rituals.
Ongulu	A building in the homestead which usually houses sleeping rooms.
Onu	The area directly outside the entrance of the homestead.
Oshiwambo	The vernacular language spoken by the people of Owamboland in central northern Namibia and Southern Angola.
Oshini	A small room or outdoor space used to pound and sieve sorghum grain.
Oshipale	A cleared patch outside the household used to sun dry sorghum seeds.
Oshoto	A reception space within the homestead, usually arranged in a circular arrangement.
Owambo	The area inhabited by the Aawambo people in Northern Namibia.
Owamboland	The term used to describe the homeland inhabited by the Aawambo people in Northern Namibia. The term was enacted by the South African Apartheid administration in 1968.
Ozimbolo	A small underground space used for pottery.
Tate	A respectful form of address for a man.
Tatekulu (Tk)	A respectful form of address for an elderly man.
Uuyando	Domestic granaries.

List of Acronyms

Actor-Network Theory (ANT)
(ANT) 23
Administrator General
(AG) 49
Build Together Programme
(BTP) 65
Constituency Development Committee
(CDC) 51
Council for Scientific and Industrial Research (CSIR)
(CSIR) 12
Decentralized Build Together Programme
(DBTP) 58
Housing Subsidy Framework
(HSF) 58
Local Authority
(LA) 31
Namibia Housing Action Group
(NHAG) 65
Namibia University of Science and Technology
(NUST) 40
Namibian Planning Advisory Board
(NAMPAB) 49
NAMPAB
Namibia Planning Advisory Board 49
National Housing Enterprise
(NHE) 57
Non Governmental Organisation
(NGO) 46
Outapi Town Council 57
(OTC) 57
Participatory Informal Settlement Upgrading
(PISU) 58
Regional Development Coordination Committee (RDCC)
(RDCC) 51
Regional Technical Teams
(RTTs) 58
Shack Dwellers Federation

(SDF) 65
Social and Economic Planning Council (SEPC) 12
Social Research Association
(SRA) 40
South African Defence Force
(SADF) 51
South West Africa
(SWA) 47
South-West Africa People's Organization
(SWAPO) 45
Sustainable Incremental Greenfield Development
(SIGD) 58
SWA
South West Africa 47
TA
Traditional Authority 64
Thematic Content Analysis
(TCA) 39
Traditional Authority
(TA) 31
UN
United Nations 49
United Nations
(UN) 49
University of Cape Town (UCT)
(UCT) 40
Village Development Committee
(VDC) 51
Communal Land Board
(CLB)
Communal Land Reform Act
(CLRA)
Coronavirus disease 2019
(COVID-19)
Development Bank of Namibia
(DBN)
Flexible Land Tenure System
(FLTS)
Grounded Theory

(GT)

Gross domestic product

(GDP)

Inverted box rib (roof sheeting profile)

(IBR)

Ministry of Urban and Rural Development

(MURD)

Namibian dollar

(N$)

Namibia Statistics Agency

(NSA)

National Communal Land Administration System

(NCLAS)

Regional Council

(RC)

Shack Dwellers Federation of Namibia

(SDFN)

Acknowledgements

I would like to express my sincere gratitude to Prof. Sampson Umenne, my supervisor and the founding Head of the Department of Architecture at the Namibia University of Science and Technology, who first guided my architectural journey when I began my undergraduate studies in 2013. I also wish to acknowledge the Staff Development Fellowship under the Talent Acceleration Programme at the Namibia University of Science and Technology for supporting and sponsoring my studies. My heartfelt appreciation goes to my co-supervisors, Dr. Guillermo Delgado and Dr. Finzi Saidi, whose teaching profoundly shaped my interest in the lived realities of place in African cities, through Dr. Delgado's undergraduate course, Housing and Everyday Life, and Dr. Saidi's Unit 15x at the University of Johannesburg's Graduate School of Architecture. Lastly, I extend my sincere thanks to all my research participants, who welcomed me into their homes and generously shared their experiences at the intersection of urban and communal land in Outapi.

Dedication

I dedicate this thesis to my mother for all her love and support.

Abstract

This research explores the architecture, domesticity, and socio-spatial practices of the Owambo homestead typology at the nexus of communal and urban land in northern Namibia, with a focus on the town of Outapi. The study responds to the under-examined encounter between indigenous spatial logics and livelihoods, as operationalised through this typology, and the cadastral logics of modern urban planning, particularly the ways in which urban growth affects communal land and its inhabitants.

Using a grounded theory approach within a case study framework, the research employs ethnographic methods, typomorphological spatial analysis, narrative interviews, and document review. Assemblage theory serves as the central analytical lens through which to understand how domestic practices, land rights, architectural forms, and urban policies interact with and reconfigure one another.

The study examines domesticity in three settings at the nexus: homesteads on communal land, homesteads integrated into newly proclaimed urban land, and homesteads reestablished in other areas of communal land. Read through an assemblage lens, these cases suggest that residents experience the homestead not only as a place, but also as an enterprise, a means of livelihood, and a housing resource shared by those who partake in that enterprise.

The findings further reveal that Owambo homesteads at the nexus are not simply displaced or transformed by urbanisation; they actively participate in shaping urban space. Their domesticity and spatial practices demonstrate resilience and adaptation, producing new urban forms and logics. The research also argues that, through compensation and formalisation, communal land rights increasingly operate as de facto claims to urban land, blurring the boundaries between informal, communal, and urban tenure systems.

The grounded theory emerging from the study shows that domesticity and socio-spatial practice in the homestead function as mechanisms of spatial production within the subaltern urbanism of northern Namibia. These findings challenge the adequacy of current planning and compensation frameworks and call for more inclusive, contextually responsive approaches to urban development.

Keywords:
Housing, urban development, socio-spatial practice, domesticity

Chapter 1: Introduction

1.1 Background

The Owambo homestead is a complex spatial and social arrangement where domesticity is actively negotiated through kinship, gender roles, labour practices, and systems of authority. Its spatial organisation, characterised by open courtyard-like zones, enclosing fences, meandering corridors, vernacular huts, and more recent modern structures, functions as a living assemblage that is constantly adapted and reconfigured in response to social change. Yet, this dynamism is underpinned by a deeply embedded moral and spatial order, reflecting what Foucault (1977) describes as micro-sites of governance, where space disciplines everyday life. Domesticity in this sense is not merely cultural, but also political, shaping behaviour, roles, and belonging through the regulation of spatial boundaries and social relations (Murray, 2008). Furthermore, the homestead's transformation under the forces of labour migration, urbanisation, and apartheid spatial engineering echoes the broader colonial and postcolonial reordering of domestic life, as explored by Hansen (1997) and Moser (2009), who both examine how domestic space in African cities has been historically reshaped to conform to imposed ideals of order, modernity, and productivity.

The spatial and cultural transformation of rural and peri-urban settlements is a key aspect of postcolonial urbanisation in the Global South. In northern Namibia, this change is especially evident in the expanding outskirts of towns like Outapi, where the merging of communal land and urban expansion creates hybrid landscapes characterised by uncertainty, resistance, adaptation, and opportunities. This thesis explores how domesticity, covering domestic life, spatial practices, and housing forms, is being reshaped at the urban communal land interface, focusing specifically on the Owambo homestead as a socio-spatial and architectural typology caught in processes of urban proclamation, land compensation, and planning abstraction.

Historically, the Owambo homestead is more than just a collection of huts or a residential cluster; it is a spatial expression of kinship, authority, and identity (John, 2019; G. Mills, 1984; Shigwedha, 2004; Shivute, 2021). These homesteads are built around values of enclosure, hierarchy, gendered use, and customary rituals. The homestead reflects a worldview rooted in land-based authority and community interdependence. However, as communal land is declared urban land under the statutory frameworks of existing urban land acts, and homesteads are displaced or restructured through compensation policies,

the spatial features and meanings embedded in these domestic forms are challenged. What is at risk is not only the physical appearance of the housing but an entire way of living with land, production, memory, and daily life.

This thesis is set in Outapi, northern Namibia, which is the largest proclaimed urban area in the communal land of Ombalantu[1], lived in by the Mbalantu people, a subgroup of the Aawambo people. It is a town, like many in northern Namibia, that is shaped by the legacy of South Africa's apartheid 'homeland' system, post-independence decentralisation policies, and contemporary urban land struggles. Its emergence as a regional service centre has brought new pressures on surrounding communal land areas, which are driven by land speculation, town planning, and modernist urban logics. Despite these shifts, many families in and around Outapi continue to reside in or maintain Owambo homesteads. Some have adapted their form to new contexts; others have been relocated and reestablished in other areas of communal land as a result of technocratic processes or incentivised to build "modern" houses that often fail to meet their spatial, social, and cultural needs.

In sub-Saharan Africa, the transformation of indigenous housing typologies and indigenous spatial practices has been attributed to a desire to modernise, the influence of Western cultural trends, technological innovations, and Western planning. At the same time, the encounters of indigenous land areas with urban settlements present a spatial planning challenge to many developing countries in the region. This growth of urban areas is denoted as 'development', which cannot be obstructed. Although the modernist planning approach to urban settlements has been applied on a global scale, it has been implemented with varying tenets and has also been subject to critique from many perspectives. Urbanists such as Jacobs (1992) have argued that the rationale behind modernist city planning erased much of the social fabric on the ground in American cities. Locally, changes in built forms have reflected the changing political and social landscape. It is well argued that modern urban planning practices in Namibia and southern Africa have not significantly moved away from those envisioned by apartheid planners (Dobler, 2016; Muller-Friedman, 2007), even with the opportunity to reimagine what urban areas are and how they are planned post-independence.

[1] Ombalantu is one of the communal land areas of Owamboland. It is administered by the Ombalantu Traditional Authority under the existing Traditional Authorities Act of 2000.

Due to the current policy apparatus relied on when communal land is encroached onto by urban land, the result is often the complete displacement of the homestead to another area of communal land, the destruction of the homestead infrastructure as shown in Figure 1 below, and the loss of all social and other non-material value associated with the homestead. These policies aim to restore the homestead's owners to a position as close as possible to what they held before the 'acquisition' or 'displacement' through financial compensation. As this research demonstrates, the Owambo homestead and the resources created within it, whether social or economic, cannot all be replaced by financial compensation.



Figure 1: Ruins left behind after a homestead received compensation to relocate to another area of communal land. Outapi, Northern Namibia

Before independence in 1990, there was little to no specific interest in the spatial development of towns in northern Namibia, how it could respond to existing practices, and how those practices could be integrated into urban development and planning. This is mainly because many sites served merely as colonial administrative centres for surrounding communal lands, and the urban spaces at the time were not primarily designed to serve native Namibians. Today, there are no qualitative spatial or socio-technical processes used to incorporate homesteads into existing town planning models and policies, nor is there research to understand the practices and domesticity of these homesteads at this intersection, reflecting the impact of urban development processes on these homesteads and their domestic and socio-spatial practices. From a spatial planning perspective, the ways in which many inherited colonial and apartheid-era planning practices transform these communities and home spaces remain unexplored.

Recent scholars such as Bassey and Obwona (2017) and Okyere et al. (2017) have argued that understanding the cultural and social dynamics of African cities is essential as a starting point to re-theorise these cities and to move away from the practice of replacing indigenous African socio-cultural practices in urban settings. Pieterse (2009) states that social forms of indigenous African life should be included in how we conceptualise and design urban areas, so they can address uniquely African challenges now and in the future. Dobler (2016) has linked the growth and development of towns in northern Namibia with concepts such as 'right to the city', because replacing indigenous typologies with modern urban models implies that the city is for a specific Western, non-native social and spatial experience. Indigenous dwelling typologies remain relevant today because they continue to provide housing for much of the population, which will occupy urban areas in the coming years, especially in the towns of northern Namibia.

1.2 Problem Statement

Namibia's urban growth is increasingly occurring through the annexation of communal land to expand urban land, bringing existing formal planning systems into direct contact with homestead-based settlement patterns on communal land. This encounter presents a clash between urban planning frameworks rooted in cadastral logic and technocratic rationality and the domesticity, socio-spatial practices, and architectural realities of communal land. In towns like Outapi, Owambo homesteads at the urban–communal nexus are often framed as remnants of a rural past or obstacles to development. Yet, as this research shows, they are active participants in spatial production. Residents adapt their homes, social practices, and livelihoods in ways that not only resist displacement but also shape emerging urban forms. These adaptations occur in the shadow of compensation policies, legal ambiguity, and fragmented governance between local authorities and traditional leaders.

The problem this research responds to is threefold. Firstly, urban planning processes and compensation policies fail to recognise domesticity and socio-spatial practice as valid urban logics. Secondly, the lack of conceptual tools for analysing such hybrid spaces results in policy misalignment. Thirdly, both existing research and policy frameworks seldom treat the homestead as an urban actor, nor do they account for its role in producing space at the urban-communal nexus. This study addresses this gap by examining how homesteads at the urban–communal land nexus function through the lens of assemblages, produced

through overlapping material, relational, and regulatory elements. It interrogates how these assemblages are affected by urban expansion, and how their spatial practices, in turn, transform urbanisation itself.

1.3 Research Questions

(a) How do residents adapt or reconstruct domesticity and architectural forms when their homesteads encounter the communal urban nexus?

(b) In what ways are spatial characteristics retained, negotiated, or abandoned under new housing and urban land tenure arrangements?

(c) What does this adaptation of domesticity and architecture reveal about the tensions of planning and compensation systems in Namibia?

1.4 Research Objectives

The research will investigate socio-spatial practices and domesticity at the nexus of communal and urban land in Namibia using the case of the Owambo homestead in the Outapi-Ombalantu urban communal land nexus. The research objectives are:

(a) To investigate the domesticity and architecture of the Owambo homestead at the nexus of urban and communal land.

(b) To explore the impact of urban land logics in the transformation of domesticity and architecture of the Owambo homestead.

(c) To explore how the domesticity of the Owambo homestead can inform urban development practices in northern Namibia.

1.5 Significance and Contributions of the Study

The study contributes important knowledge about the nuanced specificities of the domesticities of the Mbalantu subgroup at the nexus of urban and communal land. This is often overlooked by research, which generalises the domesticities and spatial practices of Aawambo people as one ethnocultural group. The

study is strongly positioned to make this contribution because it utilises autoethnography to interpret the observations at the nexus.

This study advances understanding of the socio-spatial dynamics at the intersection of communal and urban land in northern Namibia. While much of the literature on African urbanisation concentrates on informal settlements and peri-urban expansion, the interaction between homestead domesticities and modern urban planning remains under-explored in Namibia. By examining the architecture and daily life of the Owambo homestead, this research highlights local spatial logics as active agents in shaping urban space, rather than as passive subjects of displacement or modernisation. In doing so, it contributes to the body of work critiquing technocratic, universalist planning approaches in favour of more grounded, culturally embedded understandings (Pieterse, 2014; Simone, 2004). The use of assemblage theory and grounded theory offers an analytical framework for interpreting complex, overlapping spatial transformations. The thesis provides empirical and conceptual insights into African urbanism, subaltern urban theory, and the emerging discourse on decolonising planning practice in the Global South. It also develops a new grounded theory that connects domesticity, land rights, and planning policy within a unified spatial logic, positioning the homestead as a space of active spatial negotiation and production, not only tradition. The study lays a foundation for rethinking planning interventions, especially land compensation and tenure formalisation, through a more inclusive and contextually attuned perspective.

1.6 Thesis Structure

The thesis is organised into seven chapters. It begins with an introduction that provides a summary of the thesis, framing the study's significance and establishing the research questions and objectives. The second and third chapters present a background to the context and position the homestead and its domesticity at the intersection of housing, land and urban development. The literature review also offers a detailed analysis of urbanisation in Namibia, tracing developments from the colonial to the post-colonial era and reviewing existing literature on African domestic practices. Key theoretical frameworks, especially assemblage theory, are examined for their relevance in understanding the convergence of two different spatial logics at the intersection of communal and urban land. In the fourth chapter, the methodology section describes a mixed-methods approach, combining ethnography, spatial analysis through typomorphological surveys, narrative interviews, and document analysis. Grounded and assemblage theories underpin the study's framework, and the methodology considers ethical issues also influenced

by the researcher's positionality. The findings chapter provides empirical data from fieldwork in the Ombalantu-Outapi nexus, highlighting the effects of urban development praxis on communal areas and the Owambo homesteads. The discussion that follows interprets these findings, using assemblage theory to explore the territorialisation and deterritorialisation of these contesting logics, and analysing the impact of current policies on local communities.

The thesis concludes by summarising key insights, corroborating the theoretical concepts with the main findings, and offering recommendations for a more responsive planning framework.

Chapter 2: Literature Review

2.1 Introduction

This literature review critically engages with the spatial, social, and theoretical dynamics at the junction of communal and urban land in northern Namibia, anchoring these dynamics within broader urban studies debates. The themes include the development of modern urban forms in Namibia, pre-colonial approaches to working with space, and the domestic nature of home spaces. The researcher's initial ideas about the themes relevant to the nexus of urban and communal land are illustrated in Figure 2.

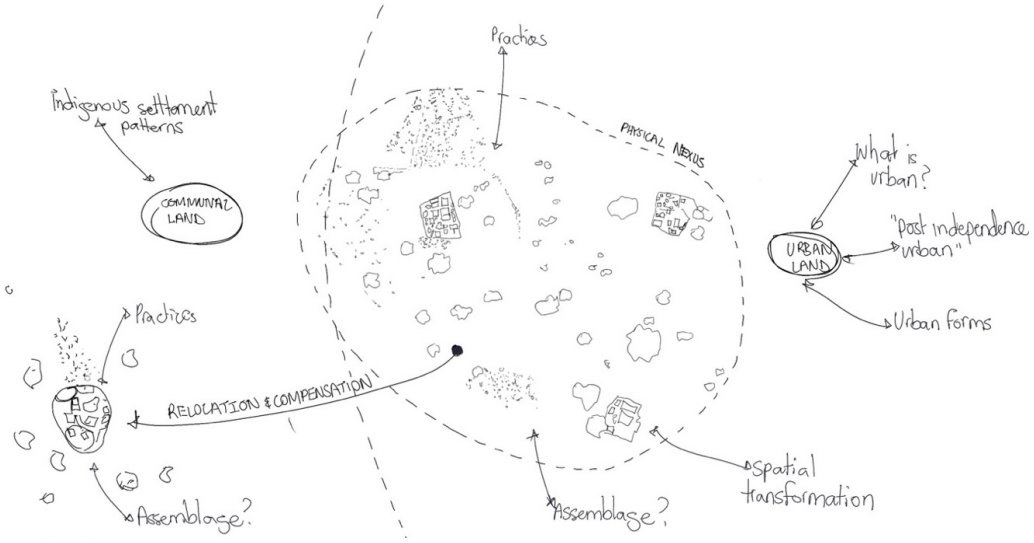

Figure 2: A conceptual image of the communal urban nexus and the themes covered in the literature review. Source: Author.

The second part of the literature review discusses emerging and active debates in urban studies across relevant theories, such as post-colonial theory, planetary urbanism, and assemblage theory. These frameworks help to understand contemporary cities and the challenges they face today, allowing alternative notions of 'urban' to be included in the conversation. Moreover, the review advocates for assemblage theory as the framework for this research, drawing on existing literature and debates to highlight its eclecticism, fluidity, scalability, and emphasis on the relational aspects of the diverse elements that comprise urban spaces. This makes it a pertinent theory for understanding a broad range of urban issues in various contexts, including the Global South (Brenner et al., 2011; Dovey, 2009, 2012, 2013; McGuirk et al., 2016; Rankin, 2011; Sendra, 2015; Simone, 2011; Wachsmuth et al., 2011). Its eclectic, fluid, and scalable nature supports grounded, context-sensitive research that considers local histories and

specific socio-spatial arrangements. The researcher observes the urban-rural nexus as messy, layered, and dynamic. Therefore, assemblage theory enables the researcher to account for this complexity without reducing it to a single logic, such as economic, political, or cultural.

2.2 Correlation of modern urban form to 'development' in northern Namibia

The first modern exploration of urban forms arose in response to the rapid growth of urban areas due to the Industrial Revolution in Europe during the 18th century. Concerns about living conditions around major industrial sites increased, leading to a realisation that more attention was needed for the organisation of space and functions. The harsh living conditions sparked the initial ideas for organised and planned urban areas, aimed at improving the health of large workforces that now constituted most urban populations. Ebenezer Howard's Garden City Vision sought to merge the benefits of urban opportunities with the tranquillity of rural life, proposing a spatial strategy aimed at addressing overcrowding and social imbalance (Howard, 1898). He illustrated this idea with his "Three Magnets" diagram, developed within a capitalist framework focused on meeting both individual and community needs (Howard, 1902/1965). Subsequently, various international adaptations developed from the garden city concept, including the 'garden village', 'garden suburb', 'satellite town', and 'new town' (Hu, 2019).

The early 20th century and post-war period in Europe gave birth to the ideas of *functionalism*, with an emphasis on urban form following urban function in urban areas. This thinking was pioneered by Le Corbusier, Mies van der Rohe, Walter Gropius, and Bruno Taut. Jencks (2021) writes that the abovementioned proponents of functionalism pushed for a very utilitarian idea of urban areas, with Le Corbusier famously stating that "architecture is stifled by custom", and that "The house is a machine for living in…" in his famous text titled *Towards a New Architecture* (Le Corbusier, 1923/1946).

Although the modernist planning approach to urban settlements has been applied on a global scale, it has been implemented with varying tenets and has also been subject to critique from diverse perspectives. In the Global North, writers such as Jacobs (1992) have argued that this rationale behind city planning erased much of the social fabric on the ground in American cities. Regionally, modernism as an approach to urban areas finds its roots within apartheid-inherited planning and administration models. As a result of the development of urban areas under the apartheid administration in the then South West Africa, many urban areas carry the blueprint of apartheid planning strategies of strict zonal planning, incorporating

buffer areas between residential areas and industrial areas, as well as white residential areas and native residential areas, as shown in Figure 3 below.

The 1923 Urban Areas Act provided the solution to the influx of black native populations to cities exclusively planned for white people in neighbouring South Africa by requiring the establishment of segregated residential areas for whites and blacks, with black people being restricted to 'native locations' as temporary places of residence. Advisory bodies drawn into the execution of this law such as the Social and Economic Planning Council (SEPC) created in 1944, and the Council for Scientific and Industrial Research (CSIR) through its National Building Research Institute borrowed heavily from the international modern discourse at the time, justifying social and political decisions around urban areas with the technical underpinnings of modernist design (Haarhoff, 2011). International planning advances were not wholly absent from apartheid South Africa; instead, they were selectively appropriated where they could serve the racial and spatial logic of separate development (Haarhoff, 2011). The implementation of modernist planning under apartheid focused on standardised housing and rigid geometric layouts that ignored African cultural norms and spatial practices. Indigenous notions of space, such as kraals, initiation sites, and communal living, were marginalised, creating alienating environments that undermined cultural identity and practices. The government's preoccupation with managing the physical, social, and economic aspects of planning influenced the procedural and theoretical approaches to planning.

The Group Areas Act in South Africa and Namibia (1950) and its equivalent systems in Namibia institutionalised racial segregation in urban and rural land allocation. Although formal apartheid legislation has been repealed, its spatial legacy remains deeply inscribed in Windhoek's urban form and everyday geographies. Contemporary scholarship shows that segregation in Windhoek persists less through explicit racial law than through inherited spatial structure, unequal access to well-located land and amenities, and market-mediated exclusion in the housing sector (Kohima et al., 2023; Roland et al., 2024). In this sense, apartheid-era differentiation between privileged urban space and peripheral African settlement has not disappeared but has been reworked into a post-independence pattern of socio-economic exclusion. This logic also extended beyond the city into the former homelands, where communal land administration remained shaped by colonial and apartheid systems of indirect rule and differentiated tenure, contributing to a durable rural–urban dualism in which informal and communal areas continue to be treated as spatially and institutionally peripheral (Werner, 2021).

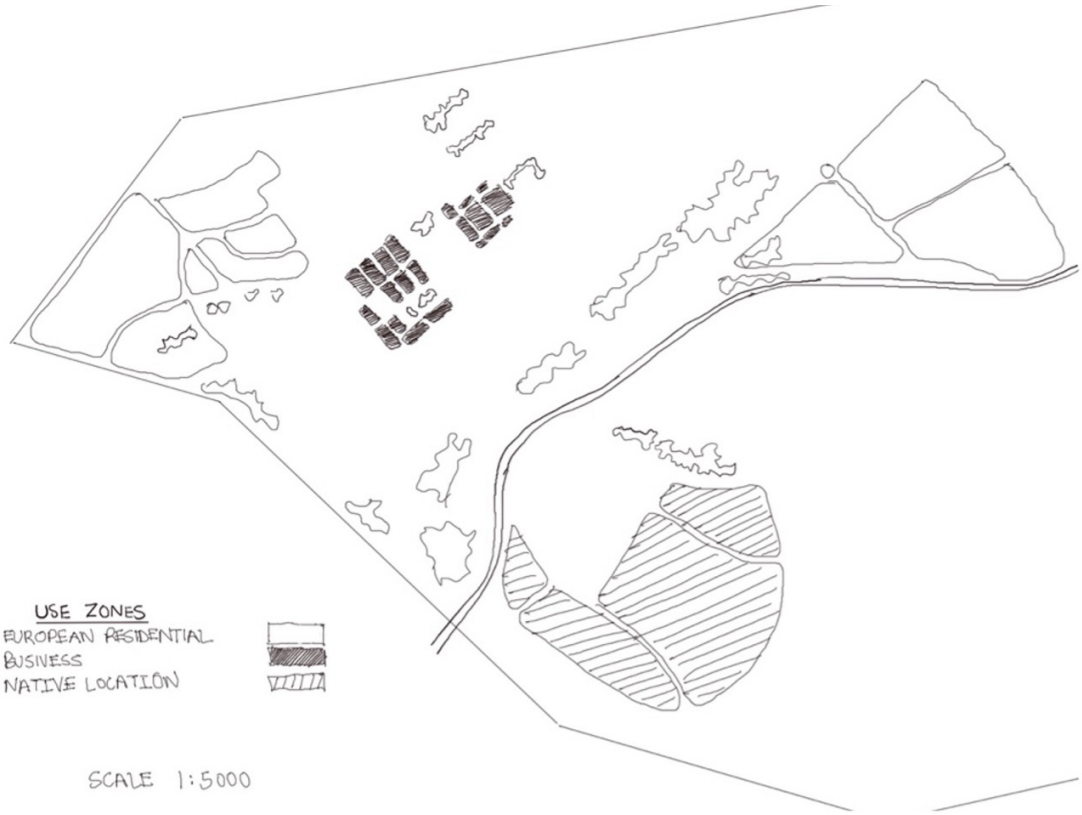

Figure 3: Sketch adapted from the Town Plan of Reitz, Transvaal, South Africa, 1951. Map showing zoning. The 'Native Location' is indicated in the centre bottom of the plan, separated from the 'European Residential' zone by a buffer strip. Source: Author.

It is well argued that contemporary urban planning practices in Namibia and South Africa have not significantly moved away from those envisioned by apartheid planners (Dobler, 2016; Müller-Friedman, 2008). Urban areas in Namibia, including those in northern Namibia, are still planned using the blueprint developed during Apartheid, not just spatially as shown in Figure 3 above, but in terms of planning bylaws and spatial planning. The resulting urban models and forms impose specific lifestyles and societal conditions envisioned by the apartheid planner, partly aimed at homogenising non-white spaces and societies.

There exist strong perceptions that the proclamation of towns in rural areas and subsequent supplanting of indigenous typologies and local lifestyles denote *development*; this is evident through an analysis of media narratives sourced through a web search of the key terms 'urban' and 'development' and selected based on relevance to town proclamation in northern Namibia, as shown in Table 1 below. The coded sources reveal a strong and recurring pattern in which Namibian media and policy texts equate urbanisation with development. Using the scoring criteria: 3 for strong, normative claims, 2 for explicit but descriptive links, and 1 for weak or ambivalent references, the analysis in Table 1 below shows that

most media articles score at the upper end of the scale. High-scoring texts consistently use promotional language that celebrates town proclamation, infrastructure servicing, expos, and investment as evidence of development, framing urbanisation as transformative and necessary. Mid-level sources still assert a clear causal relationship between urban growth and development, though in less rhetorical terms, while low-scoring texts reference development indirectly or in conflictual contexts. Overall, the pattern demonstrates that public discourse in Namibia overwhelmingly positions urban proclamation, development and formalisation as central markers of development, although the lack of reform in the substantial frameworks and models which dominate spatial planning means that the urban forms envisioned during apartheid are not very different from those which are applied to urban planning in a post-independence Namibia.

Table 1: A coded analysis of media narratives linking town proclamation to "development" in northern Namibia.

Source	Year	Score	Key Language / Evidence	Explanation
Informanté – *"Helao Nafidi a growing giant"* (David, 2022)	2022	**3**	"growing giant", "ideal for business and investment", "bringing much-needed services"	Highly promotional; frames urban expansion, services, and investment as development.
The Namibian – *"Helao Nafidi – a problematic town of many villages"* (Shivute & Vries, 2011)	2011	**1**	"development agenda", "something forcefully must be done to pave way for development"	Development invoked but in a conflictual context; weaker direct link.
Informanté – *"Helao Nafidi gears up for 16th Expo"* (David, 2023)	2023	**2**	Expo framed as attracting investment, boosting local economy	Clear link between urban activities and development, moderately explicit.
Namibian Sun – *"Development at the heart of Oshikuku"* (Iileka, 2014)	2014	**3**	"fast-track development", "rapid growth", "investor's paradise", "development of this magnitude"	Very strong developmental language; urbanisation equated with transformation.
The Namibian – *"DBN provides grant for Nkurenkuru extension"* (The Namibian, 2020)	2020	**3**	"local authorities are agents for economic development", "serviced land… contributes to economic activity and social development"	Urban land servicing framed directly as development.
AllAfrica – *"Proclamation of Nkurenkuru as a town"* (AllAfrica, 2008)	2008	**2**	Proclamation presented as catalyst for growth, improved services, opportunities	Explicit developmental framing but less rhetorical than score 3.
New Era – *"Ongwediva's bold dream"* (New Era, 2025)	2025	**3**	"bold development plan", "transformation", "unlocking economic potential"	Highly normative, framing urban expansion as development.
New Era – *"Mayor highlights ongoing growth"* (New Era, 2025)	2025	**3**	"ongoing growth", "positioning the town as a regional economic engine", "improvements in service delivery"	Strong equation of urban improvements with development.
Namibian Sun – *"Development at the heart of Oshikuku"* (Namibian Sun, 2014)	2014	**3**	"rapid growth", "development of this magnitude"	Clearly normative developmental framing.
Namibian Sun – *"Oshikuku gains town status"* (Namibian Sun, 2011)	2011	**2**	Town status linked to future investment and services	Explicit but not ideological.
New Era – *"Rapid growth to urban centre"* (Inambao, 2010)	2010	**2**	"rapid growth", "newly proclaimed centre", "expanding town"	Growth language but moderate intensity.

2.3 Pre-colonial to Post-colonial development of urban areas

Before independence, there was little to no focused interest in guiding the spatial development of towns in northern Namibia in ways that responded to rapid urbanisation or that meaningfully incorporated existing socio-spatial and domestic practices into planning processes. This is primarily because these were merely sites for the colonial administration of surrounding communal lands, and the urban conglomeration at the time was not specifically designed to serve native Namibians.

The existing dominant conception of 'urban' in sub-Saharan Africa is Western. So, when reviewing the literature on indigenous spatial patterns in sub-Saharan Africa, the prominent theories and writings are on society and territory. An individual is seen as being both a part of a settlement and a social unit, such as a family or tribe. Settlements were in a constant state of flux both at the household unit and scale, as well as at the settlement and tribal unit and scale. Silberfein (2019) explains that the limits of a settlement were often defined by the extent of a kin group, or even the extent of a physical feature necessary for the group's survival. Much of the interest in African architecture and indigenous spatial patterns only emerged after the 1960s with notable writings like *House form and Culture* by Rapoport (1969), *Architecture without Architects* by Rudofsky (1964), and *Village planning in the primitive world* by Fraser (1968) who Steyn and Roodt (2003) argue lacked an understanding of African indigenous settlement patterns and architecture as products of historical, ecological, cultural and economic circumstances. This body of work primarily focused on the aesthetics of indigenous settlements, with little coverage of the larger settlements in which they are situated and how they function spatially.

Frescura's (1980) work, titled *"Major Developments in the Rural Indigenous Architecture of Southern Africa in the Post-Difaqane Period,"* was arguably the first comprehensive research on settlement patterns up to that point. This was built upon the work in his thesis, "*The Development of Rural Vernacular Architecture in Southern Africa*" (1980). Steyn and Roodt (2003) cited the difficulty of fieldwork for outsiders in these contexts as one of the reasons for the lack of coverage of settlement patterns. Furthermore, they note that interviews did not yield any significant information about settlement patterns and form, as inhabitants did not think their customs would be interesting to outsiders.

To add to this, the researcher observed that these customs are often embedded in seemingly minor everyday practices that can easily be overlooked or treated as insignificant. One example is the brewing of a traditional beverage, *oshikundu*, in Owambo homesteads, alongside the common practice of preparing more food than is ordinarily consumed by the household. At first glance, these may appear to be simple acts of food preparation or subsistence. However, even when the people living in the homestead do not consume the brew themselves, it is still prepared in anticipation of a possible visitor. In this way, the practice ensures that the homestead remains ready to receive and host travellers, such as those moving with animals who may need a place to rest overnight. Such everyday acts therefore operationalise the homestead as part of a wider network of homesteads that supports communal subsistence and mutual care.

It is imperative to note that this body of literature emerged in a period when many African countries were first emerging from colonial rule, and their analysis of vernacular architecture was still inherently political, drawing many references from assumptions of colonial anthropology (particularly in southern Africa). In his early works, Mills (1984) already identified the tension between Eurocentric ideals adopted by professionals working in the southern African context and linked it to class distinctions and differences in education and perceptions of socio-economic issues. He further noted that Western concepts of aesthetics and the type of engagement between professionals and the ethnic communities tended to promote a “paternalistic interpretation” of the community’s needs.

Mills’s (1984) work on settlement inquiry into northern Namibia (Owamboland), shown in Figure 4 below, highlights the importance of describing indigenous spatial patterns in their context and that in which they are located.

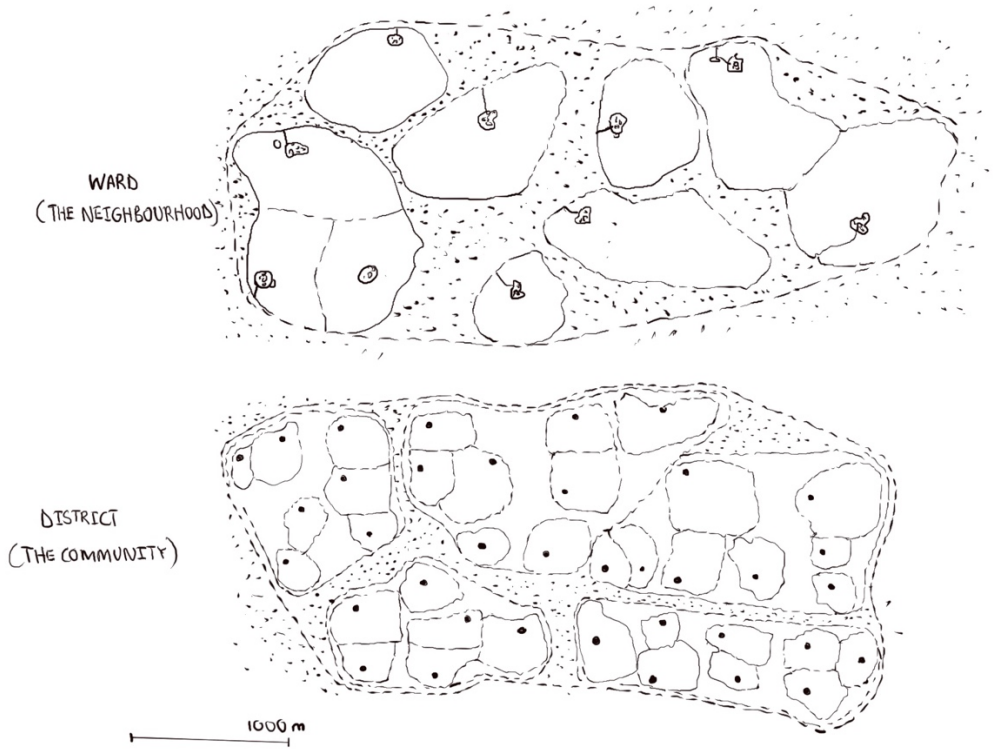

Figure 4: Sketch adapted from the drawings of settlement patterns in Owamboland by Mills (1984). Source: Author.

Mills furthermore implied that an understanding of a settlement goes beyond its formal aspects and needs to be viewed as a part of the broader experiences of the people who live in the community. In understanding indigenous settlements in this way, it is also essential to consider that, like any other settlements, the changing political and social landscape has always had an impact on settlement patterns in sub-Saharan Africa, including Owamboland.

The arrival of Europeans in the 19th century, leading to the introduction of marriage based on Western religious traditions, caused major shifts within Oshiwambo customs. This also had a significant impact on the spatiality of the homestead, with the most notable change being the shift away from polygyny, which was not promoted by the popularising Christian faith. The introduction of the money-based economy to Owamboland, primarily through migrant labour starting in the 1900s, allowed men to earn wages that they used to buy dowries, livestock, land, or goods. This injection of cash into subsistence-based economies altered household aspirations and reshaped local socio-economic hierarchies (Rudolph, 2024). These aspects led to significant political, economic, and social changes, as well as alterations in settlement patterns and customs (Mills, 1984; Oermann, 2013). Indigenous spatial patterns and the everyday life

experiences of inhabitants have always been in a state of flux, reflecting the changing natural, political, and social environments.

Early post-colonial literature on urbanisation in sub-Saharan Africa emerged between 1960 and 1980, focusing on migration and the transition of African populations from rural to urban areas (Bjerén, 1971; Epstein et al., 1967. In this postcolonial research and writing on the legacy of colonial urban planning, normative planning, and urbanisation practices from the West, sociologists raised questions about whether colonialism and its associated practices, particularly urbanisation, were beneficial to African societies. There was also an acknowledgement of the dramatic social and cultural changes that African societies underwent in the wake of urbanisation during the colonial period. Much of the literature and research on African urbanism is concerned with issues around informality in African cities (Dodman et al., 2017; Förster & Ammann, 2018; S. A. Okyere & Kita, 2015) and investigating the cause and effect of urban sprawl (Yiran et al., 2020).

The body of literature on African urbanism reflects a deep and evolving engagement with the complex realities of urban life across the continent, particularly in sub-Saharan Africa. Though diverse in approach and scope, these works are interconnected by their effort to challenge dominant, Northern-centric urban theories and to develop conceptual tools grounded in the lived experiences, histories, and practices of African cities. Early foundational texts, such as Mabogunje (1990), laid the empirical and spatial groundwork for understanding African urban growth in postcolonial contexts, framing urbanisation as a structural process linked to migration, administrative planning, and national development. Mabogunje's later work continued this trajectory, critically examining the relationship between planning and the postcolonial state. Building on these foundations, Myers (2011) and Robinson (2006) advanced the argument that African cities are not “lagging” or “deficient” versions of Western models but are instead ordinary cities with their logics and trajectories. Robinson’s call for a post-colonial comparative urbanism resonates with Myers’ push to foreground alternative epistemologies that emerge from African urban contexts.

At the core of many of these works is an emphasis on informality, improvisation, and daily practices, which are viewed not as anomalies but as fundamental aspects of African urban life. Simone’s (2004) concept of “people as infrastructure” and subsequent work with Edgar Pieterse (Simone & Pieterse, 2017) reposition the urban fabric as being constructed through relational practices, social improvisation, and provisional

alignments. These insights are reflected in empirical research by scholars like Silver (2014), who demonstrates how infrastructures are gradually and collaboratively assembled in African cities. The anthology *Africa's Urban Revolution* by Parnell and Pieterse (2014) synthesises many of these perspectives, providing a multidisciplinary overview that integrates governance, planning, informality, infrastructure, and finance. This volume positions African cities as crucial sites for re-theorising urbanisation itself, rather than merely as case studies where existing theory is applied. Collectively, these publications challenge the universal applicability of Euro-American urban models, instead promoting a more context-specific, relational, and pluralistic understanding of urbanism. They highlight the significance of history, politics, and everyday life in shaping urban forms and practices, embracing uncertainty, improvisation, and hybridity as defining features of African cities.

It is argued that the dominant way of thinking about policies, planning, and architecture in African cities is rooted in a global city system grounded in capitalism, Western theories, culture, and norms, as well as remnants of the colonial project (Simon, 1992). In many African countries, including Namibia, numerous cities or larger urban areas initially had colonial administration sites that were modelled on the blueprints of Western modern cities. They later adapted to align with the political agendas of the apartheid system, which focused on advancing capitalistic goals both spatially and socially, even after colonial rule and apartheid in countries like Namibia. Simon (1992) further views these cities more as outposts of the Western global economic system, rather than urban environments created to serve and function for local populations in Africa.

Perhaps the most significant problem with the Western transposed model applied to African urban areas, as outlined by Simon, is that many aspects of rural life remain embedded in the daily realities of urban residents. In northern Namibia, particularly at the nexus of urban and communal land, this reality is even more apparent, with survival strategies and activities remaining predominantly rural. The critique of the prevailing hegemonic thinking by postcolonial scholars extends beyond the simple transplantation of Western urban models into African cities and smaller urban areas. It also encompasses the ongoing legacy evident in the growth and transformation of these cities long after many African countries gained independence (Jenkins, 2013). Many post-colonial spatial and material transformations in African cities have been attempts to modernise these spaces.

African cities are works in progress (Jenkins, 2013). Jenkins further argues that we have not yet developed the concepts necessary to understand and categorise urban areas in Africa. Jenkins (2013) also links concerns about African urban spaces to informality in the city, and there are very few issues directly related to the blurred line between what is rural or 'indigenous' and what is urban, or what is local versus what is transposed and thus unresponsive. The researcher, however, draws parallels between the formal-informal dichotomy and the urban-rural dichotomy because informal sites in African cities or urban areas often adopt rural strategies and lifestyles related to dwelling, economic activity, and social and spatial systems (Endjala & Botes, 2020; Zimmer et al., 2022).

Whereas the above-mentioned body of literature argues that the informal aspects of African urban areas do not render them failed forms of urbanism, and challenges North-centric perceptions of what constitutes appropriate urbanism, the same can be argued for spaces that have not even been proclaimed urban, and in which customary spatial and social practices are rendered informal through the very act of urban proclamation. Pieterse (2008) locates debates on African urban space within critical urban theory, but his position is better understood as relational and informed by post-structural concerns than as straightforwardly post-structuralist. He explicitly critiques "functionalist/structuralist" readings of African urbanism and argues instead for closer attention to discourse, power, governance, and the indeterminate character of urban processes (Pieterse, 2008, 2009). In this respect, his work resists economistic reductionism without denying the continuing importance of structure and political economy in shaping African urban space. Furthermore, Pieterse (2008, 2009) emphasises agency, hybridity, and assemblage.

He also foregrounds the concepts of spatial justice and the "right to the city" in addressing spatial, economic, and social inequalities in African cities. He critiques the institutional dimensions of sustainable urban development, outlining power dynamics as a key driver of how urban spaces materialise within African cities. This builds on notable works in critical urban scholarship which, while not always explicitly post-structuralist, have consistently foregrounded the socio-political production of urban space, the operation of power through planning and governance, and the importance of discourse and everyday practice in shaping urban life (Harvey, 1973; Lefebvre, 1991; Robinson, 2006; Roy, 2005). Huchzermeyer similarly deconstructs dominant narratives such as "slum eradication" and "unlawful occupation," showing how they are mobilised to legitimise spatial exclusion and the displacement of the urban poor (Huchzermeyer, 2004, 2011).

The researcher draws parallels here when considering the exclusion of people living in homesteads who are systematically forced to choose between adopting an urban way of life that they may not be able to sustain financially, and continuing with communal land-based subsistence activities elsewhere. This body of literature provides a strong position for the case with which this research is concerned: how architecture and socio-spatial practices transform at the nexus of communal and urban land as a product of the power relations between urban planning bodies, the central government, Local Authorities (LA), and Traditional Authorities (TA). For Murray and Myers (2006) and Pieterse (2014), the central problem is "urban inequality": a question of who makes decisions, and why.

More recent literature critiqued the lack of empirical research on urban areas in sub-Saharan Africa and literature based on North-centric conceptions of what 'urban' is. This later led to many research projects of an ethnographic methodology that aimed to understand African cities from the ground up, such as Okyere et al. (2017). Jenkins (2013) writes:

> *"…understanding social and cultural attitudes and aspirations is thus key to understanding the nature of what is urban in the African context…" (p. 19)*

The researcher identifies this aspect as an essential empirical gap in the existing research because the transformation of sites such as the rural-urban nexus brings with it changing attitudes and aspirations, some of which are linked to the new opportunities presented by the dynamics in urban areas. There are voluntary changes to homestead structures to realise these aspirations, and these aspects are not well understood.

The growth and development of towns in northern Namibia has been associated with concepts such as 'rights to the city' (Dobler, 2016), because the power dynamics driven by existing policy and planning praxis mean that urban land rights for more sophisticated urban dwellers are prioritised over existing communal land rights by those who rely on subsistence activities in these communal areas. Indigenous dwelling typologies remain relevant today because they continue to provide a sustainable housing and livelihood model for much of the population, which will occupy urban areas in the coming years, particularly in the towns of northern Namibia.

2.4 The domesticity of home spaces

The term "domesticity," derived from the Latin *"domus"* (meaning "house" or "home"), originally referred to the state or condition of being rooted in one's home. However, its meaning has evolved into a social, spatial, and ideological construct. As Massey (1994) argued, domesticity is not a neutral or natural state but a socially produced and gendered space that has played a central role in shaping modern subjectivities and spatial hierarchies. In architectural discourse, Colomina (1994) demonstrates how domesticity has long mediated the relationship between privacy, gender roles, and the design of space, indicating that domestic forms are deeply embedded in societal expectations and cultural representations. While these critiques have primarily focused on Euro-American contexts, such insights are crucial for understanding how domesticity functions within non-Western, postcolonial spaces, such as the Owambo homestead in northern Namibia.

In the West, research on domesticity has examined how emerging technologies have transformed our interactions with and perceptions of the domestic sphere. Post-war literature often investigated how suburban housing became a symbol of gendered architecture, consistently defining the domestic space as a workplace for women (Hayden, 1981). Wright (1991) placed domesticity within the contexts of culture and identity in studies of the social history of housing in America.

As the concept of the domestic space in developed countries is continually challenged, Martella (2019) argued that its questioning leads to a redefinition of the limits and functions of space/house, provoking expansions and contractions, and seeking identity not only in the interiorisation of the physical space but also in the relationship with the urban context.

Karimi (2013), in her writings on domesticity and consumer culture in Iran, examined the modern culture of the Middle East through the lens of domesticity and the shifts in the culture of 'homemaking', particularly those inspired by homemaking programmes originating in the United States in the early 1900s, which aimed to make housing in American cities more hygienic and homogeneous.

Others have situated the study of domesticity within the context of former colonies. Mohlman (1998), in her analysis of Philippine domesticity amidst urbanisation, described domesticity as the attitudes residents hold towards how their space is used, ideas about what social relations and activities are appropriate, and how the social and urban environment of the home shapes these. This view expanded domesticity from its recent emphasis on dividing public and private spheres to a broader investigation of

the socio-spatial roles of the home and its links to the wider urban setting. Cruz Petit (2015) examined traditional Mexican interiors within the context of evolving urban lifestyles, environmental perspectives, and housing ownership models. He discovered that new forms of domesticity emerged, which no longer reflected the traditional home but rather responded to experiences of home aligned with specific spatial and economic realities.

Studies on domesticity are also strongly linked to issues of gender, with a significant focus on women and the role they play in the home space and the process of housing. This is relevant to the Owambo homestead, which is based on gender roles as well (Jenkins, 2013; Larsson, 1993).

Larsson (1993) investigated the role of women in the domestic sphere of Tswana society to expose the tension between the social setting of a traditional Tswana homestead and a modern urban home facilitated by Botswana's early housing policy, which provided loans and expertise to construct low-cost urban-style housing. The contradiction highlighted by Larsson is that in these low-income urban housing typologies, which replaced homesteads in which lifestyles were still very much rural, as much of the family still lived together in one homestead, there were many gender-defined roles such as cooking and fetching water, and spatial separation of gendered activities and sleeping spaces. The lack of the 'traditional' spatial qualities, which allowed women to conduct their domestic work, made it difficult for them to take care of their families. Larsson argues that the application of spatial bylaws alters how these houses are built, and the shift in materials to acceptable urban standards disconnects women from their traditional roles as 'homemakers' and 'homebuilders' in the modern housing process. Larsson's suggestion is not that women should be held captive by their customary gendered roles, but rather highlights the inherent concern with introducing policies, bylaws and designs aimed at transforming housing, particularly from a rural to a modern archetype, which are not responsive to existing customary practices and ideals.

However, the modernisation of housing in urban, peri-urban, and rural areas has not only had negative impacts on women. In southern African urban contexts, participatory and incremental housing initiatives have shown significant empowerment benefits for women. In South Africa, low-cost, government-subsidised housing schemes, such as those in KwaZulu-Natal, have enabled women to participate in construction processes, acquire technical skills (e.g., plumbing, painting), and start small microenterprises, thereby increasing their agency and confidence, although male dominance in leadership remains widespread (Ndinda, 2009). Informal settlement upgrading programmes have also allowed women to voice important concerns regarding safety, sanitation, and community amenities; however, gendered

power dynamics continue to marginalise their decision-making roles. During the COVID-19 pandemic, the limitations of gender-neutral housing designs became clear, exposing ongoing issues related to affordability, care responsibilities, and spatial security (Adebayo et al., 2022).

Within Namibia, community-driven models such as the Shack Dwellers Federation of Namibia (SDFN) and the Namibia Housing Action Group (NHAG) have been particularly transformative. Two-thirds of SDFN's members are women who have led savings initiatives, participated in collective land negotiations, and overseen informal settlement upgrading, thereby challenging male-dominated leadership traditions and promoting gender equality in urban governance (Shack Dwellers Federation of Namibia & Namibia Housing Action Group, 2023). Meanwhile, the government-supported “Build Together” self-help housing programme demonstrates livelihood improvements among women beneficiaries through asset accumulation, better access to services, and community mobilisation (Kakwambi, 2021). The national Flexible Land Tenure System (FLTS) further supports women's empowerment by offering secure, upgradeable tenure rights, start-up and land-hold titles within collectively managed “blockerf” arrangements, thus enabling ownership, economic participation, and long-term tenure security (De Villiers et al., 2019). Lastly, recent evaluations highlight residents' willingness (notably women) to engage in housing-related public service co-production, indicating that inclusive governance frameworks could enhance empowerment outcomes (Shack Dwellers Federation of Namibia & Namibia Housing Action Group, 2023).

Collectively, these studies show that when women are central to housing delivery, from savings and construction to tenure security and governance, their socio-economic agency, skills, and leadership are significantly strengthened. However, ongoing structural gaps in formal schemes highlight the need for gender-responsive designs, gender-disaggregated monitoring, and institutional mechanisms that support women's leadership and decision-making roles across urban housing initiatives.

2.5 Theoretical framework

The unavoidable tension around sociological research in the cognate fields of architecture and urban planning is that it often applies society-wide theory to areas of focus that are materially expressed (Mills, 1986). Research on the production of space, the sociological meaning of space, and socio-spatial practices is often embedded in a small number of notable and recurrent theoretical debates that attempt to relate

society to space, such as space syntax theory by Hillier and Hanson (1984), structuration theory by Giddens (1984), and Lefebvre's theory of the production of space (1974/1991). Mills (1986) proposes a method for the study of southern African domestic architecture by combining the space syntax theory of Hillier and Hanson (1984), understood as a set of techniques for analysing spatial configurations, with Anthony Giddens's structuration theory (1984). These theoretical traditions were influential in the study of urban space and human settlements more broadly, emerging within a field shaped earlier by the Chicago School's urban research agenda and later reworked through Marxist and political-economy approaches to the city (Castells, 1977/1979; Harvey, 1973; Park et al., 1925).

Recently, the diverse nature of cities and other human settlements has sparked numerous emerging theoretical debates about the social, spatial, economic, and political aspects of urban areas. There is also a push for scholars to agree on core concepts of urbanisation and urban form to establish a shared language for urban research (Storper & Scott, 2016). These influential debates include (1) assemblage theory (Deleuze & Guattari, 1987; McFarlane, 2011), (2) planetary urbanism (Brenner & Schmid, 2014, 2015), and (3) post-colonial urban theory (Robinson, 2006; Roy, 2009; Simone, 2011). However, Storper and Scott (2016) critique these debates for being bogged down by complex philosophical and epistemological abstractions, which distance them from truly understanding the 'urban' as a tangible social phenomenon. Although Storper and Scott's argument against the debates is largely valid, especially with postcolonial theory's "provincialization of knowledge", the researcher believes it is essential to develop a localised understanding of the empirical phenomenon in Global South urbanism as a starting point for truly defining what 'urban' means in these contexts.

Planetary urbanisation, as developed by Brenner and Schmid (2014, 2015), offers a compelling lens through which to examine how urban growth in northern Namibia affects peri-urban and rural communities. However, this body of work has also been criticised for its high level of abstraction and for not engaging sufficiently with the everyday life dimensions of urbanism, including domesticity. Postcolonial urban theory remains an important critique of Eurocentric urban knowledge, but it also presents certain ambiguities and is not, on its own, a definitive framework for interpreting the contemporary and eclectic nature of urban areas and their development. Critics have argued that it can drift toward particularism, while struggling to articulate precisely how Southern cities differ from their Northern counterparts or how such differences should be theorised in relation to broader urban processes (Schindler, 2017; Storper & Scott, 2016). Roy (2011) similarly cautions that postcolonial urbanism must

move beyond simply recognising the diversity of cities, and instead develop an analytical framework capable of holding together urban particularity and global relationality.

Assemblage theory, on the other hand, which Storper and Scott criticise for its eclecticism and indeterminacy, offers a theoretical and conceptual approach that accounts for the complexities of urban areas and how they are constructed from many parts with complex networks and histories.
The roots of assemblage theory stem from the writings of French philosophers Gilles Deleuze and Felix Guattari in their renowned work *A Thousand Plateaus* (Deleuze & Guattari, 1987). An assemblage is the convergence of heterogeneous elements within an institution, place, built structure, or art form, where the whole exceeds the sum of its parts. The theory has been further developed by writers such as DeLanda (2016), transforming it from Deleuze and Guattari's often criticised, complex writing style into a thoroughly applicable theory. Nail (2017) has further elaborated on assemblages and their typologies (territorial, state, capitalist, and nomadic), which are distinguished by their organisational arrangements. Assemblages serve as a way to explore relational processes, actors, and socio-material aspects of a whole, whether it be a house or an urban area. With this understanding and the etymology of the word, an assemblage can be the coming together of two or more things such as, in this research, communal land and its associated domesticity and socio-spatial practices, with urban land and its related policies and underlying practices resulting in an emergent urbanism with unique characteristics. In urban studies and architecture, assemblage is employed with a strong ontological and methodological stance characterised by scalability and eclecticism. It has contributed to critical urban theory, concepts like spatial justice and dwelling, urban regeneration, and planning discourse in general (McFarlane, 2011a, 2011b; McGuirk et al., 2016; Rankin, 2011; Sendra, 2015; Simone, 2011; Wood, 2009).

Rankin (2011) defends this eclecticism, comparing assemblage approaches in urban theory to other relational approaches in critical development studies, arguing that the ideas of assemblage can be beneficial in exploring how various urban processes connect and intertwine, as well as how they contribute to larger-scale processes of capital accumulation by blending Foucauldian governmentality, cultural politics perspectives, and feminism. Brenner et al. (2011) and Wachsmuth et al. (2011) have offered critiques of assemblage theory’s coherence, focusing on its fluidity, which emerges from the dynamic evolution of cities, and the theory's rejection of linear causality and pre-existing structural foundations for urban processes and socio-spatial development. They also highlight the theory's emphasis on empirical detail over abstraction. The resistance of abstractions and assemblages, and their portrayal

of multiple urban understandings, is praised by McGuirk et al. (2016), who value an inquiry style that operates empirically from the ground up. They further advocate for assemblage, as it takes us beyond hegemonic categories of powerful actors. Other scholars (Brenner & Schmid, 2015) pose critical questions regarding the epistemology of the urban considering emerging forms of urbanisation worldwide that challenge current normative understandings of urban areas as settlements and question the existing categories, methods, and 'cartographies' used to understand urban life. Mould (2016) argues that there is no need for a foundational concept to guide urban studies, asserting that if a unified urban theory is to exist, it should view cities as varying degrees of urbanisation rather than attempting to arbitrarily define what constitutes a city.

The starting point of the researchers argument for assemblage theory and its relational ontological approach is that its eclectic nature effectively explains the complexities of spatial outcomes in urban areas, which are driven by the actions of actors, their social relationships, histories, aspirations, and relevant urban policies. Furthermore, the case for assemblage accounts of urban areas, particularly concerning the nexus of urban and communal land highlights that this area, in its spatiality, history, actors, agency, and spatial outcomes, is clearly eclectic. It lacks standard definitions and accepted forms of what constitutes urban space, apart from those borrowed from Western neighbourhood models and their social, economic, and political dimensions.

Lastly, assemblage theory and its ontological orientation offer a useful way of studying the complexity of urban areas across different scales, from actors, networks, and materialities at the city-wide level to neighbourhood and domestic scales, especially when considering domestic space and dwelling. McFarlane argues that assemblage provides a productive basis for thinking of the city as a dwelling process and for understanding urban spatiality as processual, relational, mobile, and unequal, rather than as a fixed or bounded object (McFarlane, 2011a, 2011b). This suggests that assemblage thinking extends beyond straightforward analyses of the spatial, social, economic, and political expressions of urban areas by attending to the heterogeneous relations through which urban life is composed, sustained, and transformed across scales (McFarlane, 2011a; Kamalipour & Peimani, 2015). In this sense, assemblage provides a useful starting point for proposing ways to develop or transform urban space on the basis of grounded empirical knowledge and situated urban practices (McFarlane, 2011b).

Actor-Network Theory (ANT) is closely related to assemblage because both are relational theories of the world. However, ANT tends to foreground associations between heterogeneous actants, while assemblage theory places greater emphasis on the relational capacities of heterogeneous elements and on the possibility that these capacities are not exhausted by any single network of interactions (McFarlane, 2011; Müller, 2016). ANT also tends to bracket broader social contexts, such as cultural and historical influences, as explanatory categories unless these can be traced through the formation of specific networks and associations (Latour, 2005). This approach overlooks the importance of critically examining the researcher's role and how their position might impact the development of ANT explanations for phenomena (Müller, 2015). Although both ANT and assemblage theory attend to human and non-human elements, assemblage places greater emphasis on the capacities, relations of exteriority, and emergent composition of heterogeneous elements across multiple scales (McFarlane, 2011; Müller, 2016). In this respect, assemblage may offer a more useful framework than ANT for analysing the intertwined social, material, economic, and political processes at the nexus, particularly where the analysis must move between domestic, neighbourhood, and wider urban formations. McFarlane (2011) further argues that assemblage is especially valuable for understanding urbanism as a processual and relational formation, rather than as a fixed object, which makes it well suited to contexts shaped by complexity, unevenness, and transformation.

An urban area can be seen as an assemblage, and a house can also be regarded as an assemblage. This perspective is especially important when one views these two scales of entities not as nouns, but as verbs, and not as static outcomes, but as ongoing processes. These processes (the verbs) animate the term 'urban' and envisage it not merely as a form but as related multiplicities in motion. Dovey (2013) demonstrates this multiscalar use of assemblage from urban planning to architecture by considering architectural spaces as smaller assemblages. Based on this, the researcher argues for assemblage thinking’s multi-scale applicability, as smaller assemblages such as a homestead can be enmeshed into larger ones like urban areas, cities or rural settlements. Dovey (2009) suggests that assemblage can serve as a theory of ‘space’, enabling us to explore the sociological aspects of daily life that constitute socio-spatial activities in architecture and urban life. This is further supported through the ideas presented by Dovey (2009, 2012, 2013), Muminovic (2019), who merge ‘place’ with assemblage, and Kamalipour and Peimani (2015), who position assemblage as an effective theoretical framework for understanding the complexity of cities across different scales of social and spatial interactions.

At the same time, Brenner et al. (2011) acknowledge the contribution made by McFarlane to critical urban theory by viewing assemblage theory as a practical approach for conducting in-depth analyses of urban inequalities, which emerge through historical connections and future possibilities. They argue that by closely examining assemblage processes through detailed ethnographic study, urban researchers can gain deeper insights into how urban conditions develop. This understanding, in turn, can help them conceptualise alternative urban futures more effectively. McFarlane (2011) and Dovey (2011) argue for the contributions that assemblage can make as a body of critical urban theory through its methodologies such as ethnography and thick description, which focus on how daily life in urban areas is produced. Brenner et al. (2011) challenge the contributions that assemblage can make towards extending critical urban theory, particularly through its empirical focus, and prefer pairing critical urban theory with political economy. They state that the weakness of assemblage is that it does not emphasise enough the power of capitalism in shaping urban areas (Swanton, 2011).

However, for McFarlane (2011), the support for assemblage in this way is rooted in the belief that material aspects, often neglected by political economy theories, influence relations, agency, and actions of actors within urban spaces. Simone (2011) also comments on this debate, asserting that an empirical approach is practical and that we must avoid overarching explanations rooted solely in political economy, as urban spaces may be more complex than a single overarching explanation can capture. This research favours an empirical approach to understanding these spaces, particularly emerging urban areas such as the nexus between communal and urban land, because of the strong material expression through the structure of the home and other material aspects of everyday life and domesticity.

There is also an ongoing debate among urban researchers who use assemblage theory regarding whether assemblages, as a noun, are desirable or if they represent some kind of equilibrium or the ideal state of affairs. This perspective originates from the early writings of Deleuze, who employs terms such as symbiosis and sympathy (Deleuze & Parnet, 1987), as cited in Müller and Schurr (2016), or suggests that they are ‘desired’ (Müller, 2015). Sendra (2015) supports this view further by applying concepts from assemblage as strategies aimed at promoting informal uses of the public realm in urban practice. However, employing assemblages to understand the relationship between formal and informal aspects of the city, as done by Dovey (2012), McFarlane (2011a), and Simone (2011), raises questions about whether they are indeed desirable. Moreover, the idea of assemblages as a process rather than a static state

remains subject to debate. The concepts of assembling and disassembling as used in Sendra (2015) challenge the consistency of this understanding of assemblages.

When assemblage is positioned as a way of understanding emerging urbanism in the Global South, particularly in cases such as the nexus between urban and communal land in northern Namibia, the key question becomes what the Global South reveals about the urban, why this matters, and how it should shape our understanding of urbanism. What does any epistemology from here have to offer for the urban condition and how we understand it? From a post-colonial perspective, Ndlovu-Gatsheni (2018) writes about the idea of epistemological freedom, in which knowledge is de-Europeanised, or as he puts it, the 'provincialisation' of Europe, and the 'deprovincialisation' of Africa. This brings into question what we know about 'urban conditions today', and what we know about how to learn about the 'urban' condition. The ontological and methodological propositions of assemblage theory enable this type of enquiry into spaces in the Global South, such as the nexus of urban and communal land in northern Namibia.

This research adopts a decolonial stance in its epistemology. Essentially, it is decolonial because it questions why the current understanding of 'urban' is strongly rooted in European and Western perspectives, and it aims to study local spaces from the ground up to develop alternative knowledge on how we should comprehend urban spaces, their formation, and their complexities. Mignolo (2005) described epistemic decolonisation as the shift away from rhetoric built around terms like 'development', which have often been used to justify interventions on the ground in local spaces, later filled by Western ideas, knowledge, and concepts on how to construct these spaces. Bhambra (2007) states that:

> "*…the Western experience has been taken both as the basis for the construction of the concept of modernity and, at the same time, that concept is argued to have a validity that transcends the Western experience" (p. 4).*

The author mobilises the thinking of post-colonial scholars' decolonial approaches such as Mbembe (2001), and what he means by the *postcolony* not as a denunciation of power, but rather as:

> *"...inertias, and swings that overlay one another, interpenetrate one another, and envelope one another: an entanglement" (p. 14).*

The writing of Mbembe on the postcolony as an *entanglement* closely overlaps with the idea of an *assemblage* as written by DeLanda (2016) and Nail (2017), and *with the concept of agglomeration* as discussed by Dovey et al. (2018) and Storper and Scott (2016). These ideas all have strong Deleuzian roots.

2.6 Theoretical tensions and methodological mediation

It is also important to reflect on the irony of critiquing one set of predominantly Western planning and spatial theories, while drawing on another set of largely Western theories (assemblage and the concepts therein) to interpret the case. This tension cannot be ignored. The thesis does not claim to stand outside the unequal geographies of knowledge production within which architectural and urban research is located. Rather, it acknowledges that many of the conceptual tools available to the researcher have themselves emerged from Euro-American intellectual traditions. However, the intention here is not to replace one universalising explanatory framework with another. Instead, assemblage is employed more cautiously as an ontological and conceptual lens through which the heterogeneity, relationality, and incompleteness of the communal–urban nexus can be understood. Its usefulness lies not in offering a total explanation of Owambo spatiality, but rather in making room for the multiplicity of actors, materials, authorities, practices, and histories through which the homestead and the nexus are produced and transformed.

At the same time, this research attempts to temper the extractive tendency of imported theory through its methodological orientation. The use of narrative interviews, participant observation, Oshiwambo as a language of inquiry, and vernacular categories such as *epata*, *oshoto*, *ondjuwo*, and *omikala* means that the interpretation is not driven by theory alone, but by meanings emerging from the field itself. In methodological terms, the combination of assemblage with constructivist grounded theory is important here. While assemblage offers a way of conceptualising complexity, heterogeneity, and multiscalar relations, grounded theory provides a means of reading these relations from the ground up, allowing patterns, meanings, and tensions to emerge inductively from the empirical material rather than being imposed in advance. This means that the context is interpreted through iterative engagement with lived realities, participant narratives, spatial observations, and documentary evidence, rather than through the direct application of a pre-formed conceptual model. In this sense, theory is made to answer to the case, rather than the case being made to fit the theory. The contribution of the research therefore lies not in proving the universality of assemblage theory, but in showing how the Owambo homestead and the communal–urban nexus may also stretch, qualify, and provincialise it through situated empirical knowledge.

2.7 Summary of Literature Review

The literature review chapter examined the evolution and development of urban forms in northern Namibia, from pre-colonial to post-colonial periods, linking these themes to contemporary debates in urban studies. It started by addressing the colonial enforcement of modern urban planning, rooted in apartheid, and its enduring influence on spatial development in Namibia. Modernist ideas, such as Ebenezer Howard's 'garden city' concept and Le Corbusier's functionalism, are contrasted with the rigid, segregationist urban planning practices of apartheid, which continue to shape the region's urban landscapes today. Pre-colonial urbanism, although marginalised by colonial rule, reveals indigenous spatial practices that display a fluid relationship between people and their environments. These patterns were often ignored by planners, whose Eurocentric perspectives influenced the urban-rural divide. The literature review critically examined how these indigenous practices may be connected to urbanisation in the post-colonial context, especially in northern Namibia. The review also explored the concept of domesticity, with references to both international and African contexts. It discussed how gender roles, materiality, and spatial arrangements within homes are affected by modern urban transformations, drawing on examples from Botswana and Mozambique.

Finally, the review advocates for using assemblage theory as a suitable framework to understand the complexities of urban spaces in northern Namibia. Assemblage theory, with its emphasis on relationality, scalability, and eclecticism, offers a flexible approach to analysing urban areas and their socio-material processes. The researcher critiques prevailing hegemonic ideas about urbanism and proposes alternative notions, especially for spaces at the intersection of communal and urban lands in northern Namibia, by employing assemblage thinking. The researcher positions assemblage as a lens through which to examine the interaction between policy, social practices, and material aspects of urban life, challenging traditional urban models and fostering a decolonised, grassroots understanding of urban spaces in the Global South.

Chapter 3: Intersection of land, housing and socio-spatial practices at the nexus

3.1 Introduction

This chapter explores the crucial connection between land governance, housing policy, and socio-spatial practices in shaping Namibia's urbanisation, with a specific focus on the link between communal and urban land. It demonstrates how the merging of customary land tenure systems with formal urban planning has significantly affected the country's spatial development trajectory, particularly in north-central Namibia where Owambo communal areas meet urban settlements. Understanding this connection is vital within the wider research because it uncovers the historical continuities and current tensions that influence everyday life or domesticity and urban form in Namibia. The chapter initially places the issue in a historical context, outlining how colonial and apartheid regimes established a dual land system that separates communal territories from urban and freehold lands. This historical-policy overview demonstrates how Namibia's current land and housing situation is rooted in a complex legacy, setting the foundation for understanding contemporary urban–communal interactions. Crucially, Chapter 3 then investigates how these land governance and housing policy dynamics unfold at the communal–urban interface. In doing so, it makes a significant contribution to the thesis's central argument regarding domesticity and socio-spatial transformation. The chapter clarifies that the lived experience at the nexus is closely connected to the country's land governance history and housing policy environment.

3.2 Namibia's spatial history, precolonial to colonial

Namibia boasts a rich precolonial history. The San are widely regarded as among the earliest inhabitants of southern Africa and historically lived primarily as hunting-and-gathering peoples organised in small, kin-based groups (Mhiripiri et al., 2024; Suzman, 2001). In central and southern Namibia, communities such as the Nama and Damara were associated mainly with mobile pastoral lifeways and relatively low levels of political centralisation (Werner, 1993). In the north, more centralised agro-pastoral societies developed, including the Owambo polities of southern Angola and northern Namibia, which were structured through matrilineal clans and systems of kingship and succession (Davies, 1993; Salokoski, 2006). Archaeological work suggests that food production spread into Namibia over the last two thousand

years, with Bantu-speaking farming communities concentrated especially in the far northern region (Kinahan, 2023).

Before formal colonisation, central and southern Namibia was occupied primarily by pastoral communities including the Herero, Nama, Damara, and, from the later nineteenth century, the Rehoboth Basters (Werner, 1993; Wallace, 2011). Precolonial land use in these regions was characterised by mobility, communal access to land and water, and relatively low levels of fixed territorial boundary-making, although Herero-speaking societies also maintained more complex kinship and descent arrangements, including forms of double descent (Werner, 1993; Gordon, 2004). The Nama and Damara were linked through Khoekhoegowab, while the Rehoboth Basters, a mixed-descent community with roots in the Cape, settled at Rehoboth and adopted the Vaderlike Wette in 1872, which provided for elected leadership and a constitutional order (Haacke, 2019; Kjæret & Stokke, 2003; Stanley, 2007). The territory became a German colony in 1884, and conflict over land, cattle, labour, and political control culminated in the 1904–1908 war and genocide against the Herero and Nama under German rule, including under General Lothar von Trotha (Wallace, 2011; Adhikari, 2008).

Land was central to the colonial project, both as a productive resource and as the basis of political and territorial control, and German dispossession accelerated through treaties, concessions, and coercive expropriation, especially in central and southern Namibia (Werner, 1993; Wallace, 2011). Rather than saying that communal tenure simply “made it easy” for dispossession, it is more accurate to note that precolonial systems of mobile land use and loosely demarcated territorial control were exploited and reinterpreted by colonial authorities in ways that facilitated land alienation (Werner, 1993). During World War I, South Africa occupied the territory and later administered it under League of Nations mandate, before extending apartheid rule after World War II. SWAPO launched the armed struggle in the 1960s, and Namibia attained independence on 21 March 1990 (Wallace, 2011).

Since independence, Namibia has pursued regional and urban planning through a range of national policies and statutes, but within a context still shaped by the unequal land distribution inherited from colonialism and apartheid. The first National Land Conference in 1991 adopted a land reform approach framed by national reconciliation and unity, and commercial land reform proceeded largely through market-based acquisition, including the willing-buyer, willing-seller approach, which has been widely criticised as slow and costly (Melber, 2019; Mundia & Haimbili, 2023). Relevant post-independence

legislation and policy frameworks include the Regional Councils Act 22 of 1992, the Local Authorities Act 23 of 1992, the Town and Regional Planners Act 9 of 1996, and the National Housing Policy, first adopted in 1991 and revised in 2009 and 2023 (Regional Councils Act 22 of 1992; Local Authorities Act 23 of 1992; Town and Regional Planners Act 9 of 1996; Ministry of Regional and Local Government and Housing, 1991; Ministry of Regional and Local Government, Housing and Rural Development, 2009; Ministry of Urban and Rural Development, 2023).

Today, Namibia faces challenges with centralised government functions and integrating commercial farming interests with communal area aspirations. Traditional leaders still play a role in rural planning, but the central government and Non-Governmental Organisations (NGOs) have increasingly contributed to and led policy development. Namibia's dual land economy is rooted in colonial and apartheid dispossession and remains expressed in a bifurcated tenure system in which freehold land is concentrated in the commercial farming sector, while communal tenure supports the majority of black rural residents on generally less productive land (Menestrey Schwieger & Mbidzo, 2020; Werner, 2021). In communal areas, the Communal Land Reform Act 5 of 2002 strengthened the recognition and registration of customary land rights and introduced leasehold as a mechanism intended to encourage economic development, but customary rights still do not amount to outright ownership and freehold titles generally cannot be acquired in communal areas (Werner, 2021). As a result, communal land rights have limited exchange and collateral value in formal credit markets, which can constrain investment and commercialisation (Werner & Bayer, 2016).

Research on the implementation of the Communal Land Reform Act also points to persistent governance problems, including tensions between Traditional Authorities and Communal Land Boards, overlapping authority, and slow responses to disputes such as illegal fencing (Hebinck, 2021). More broadly, former indirectly ruled areas in Namibia, where land continues to be allocated through customary authorities, tend to show lower levels of market-oriented agricultural activity and lower living standards than formerly directly ruled areas, suggesting that the structural legacy of dual tenure continues to shape poverty and underdevelopment in many communal regions (Chlouba & He, 2021). Despite these challenges, some communal land rights holders engage in commercial activities, although often informally and at a disadvantage. Namibia's land tenure system and economic disparities pose significant challenges to development and equitable resource distribution. The government continues to address these issues through various policies and reforms to improve land use and management.

3.3 Pre-colonial spatial planning and governance in north-central Namibia

The term Owamboland has been adopted as the name for the area in north-central Namibia between the Kunene and Kavango Rivers, where Aawambo communities settled from about the mid-sixteenth century as shown below in Figure 5.

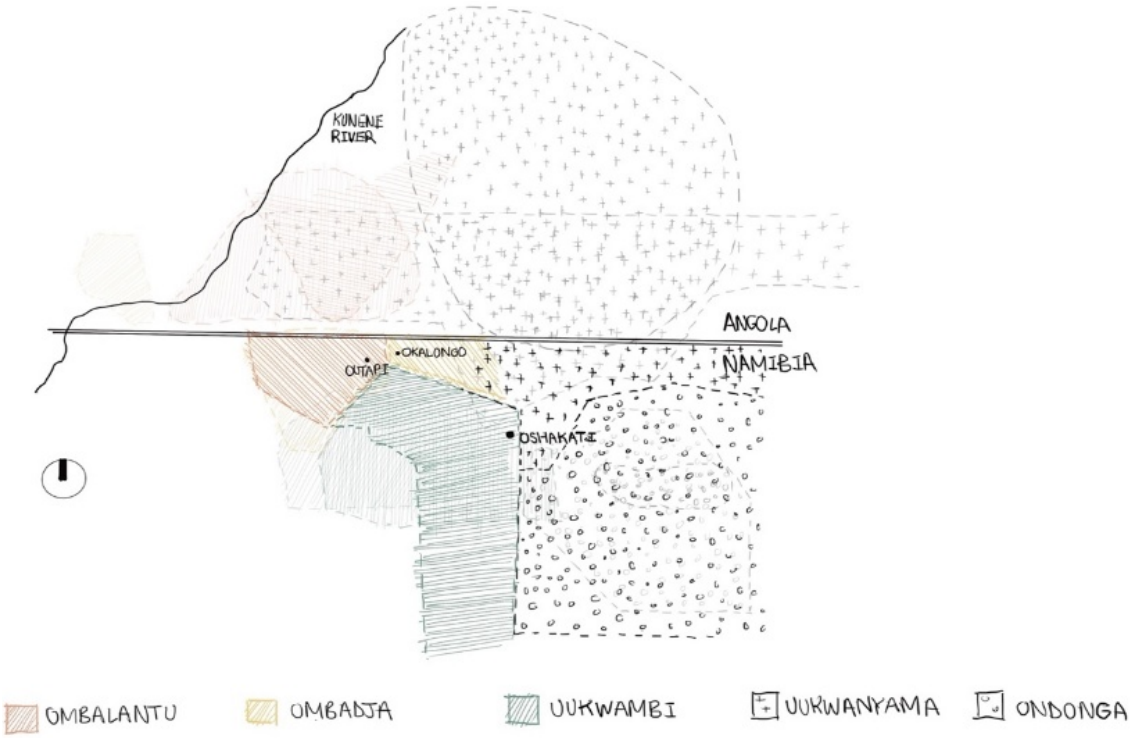

Figure 5: Sketch map of north central Namibia showing the area known as Owamboland, overlaying the Owambo subgroup boundaries recorded in 1937 (National Archives of Namibia [NAN], 1937), 1948 (Loeb, 1962) and 1971 (Department of Foreign Affairs, 1974). Source: Author

Although the earliest written references to the region date from the 1590s, the different subgroups did not necessarily identify as a single larger Aawambo state, but rather as distinct kingdoms such as *Evale, Ombandja, Ombalantu, Ondonga, Ongandjera, Oukwanyama, Uukwambi and Uukwaluudhi* (Shigwedha, 2004). These kingdoms were governed within their own territories by kings, chiefs and headmen, representing precolonial forms of traditional authority in north-central Namibia (Shigwedha, 2004; Dobler, 2008). Typically, Owambo settlement took the form of dispersed clusters of homesteads rather than dense nucleated settlements, and the *egumbo* (home) commonly incorporated domestic structures and a livestock enclosure or kraal, while settlement and land-use patterns were shaped by access to water,

woodland, arable land and slightly raised ground within the oshana landscape (Fujioka, 2010). Land allocation was mediated through traditional authority structures, with chiefs and headmen retaining central roles in the allocation of residential and cultivation land (Dobler, 2008; Werner, 2021). A significant change to this system and to Aawambo customary life came with the introduction of Christianity by Finnish missionaries, who became the first permanent outsider settlers in Owamboland in 1870 (Shigwedha, 2004). The arrival of mission Christianity and European concepts altered religious life, dress, education and other aspects of everyday social practice, although traditional authorities continued to shape land and spatial arrangements in Owamboland (Shigwedha, 2004; Werner, 2021). During colonial rule, the area largely escaped the scale of settler land alienation seen in central and southern Namibia, but it became strategically important to the colonial state primarily as a labour reserve and frontier zone (Dobler, 2008).

With the hardening and later demarcation of the Angola–South West Africa boundary, Owamboland was effectively divided between southern Angola and northern South West Africa into the area of north-central Namibia shown in Figure 6 below. The 1927 border demarcation prompted the movement of many Ovakwanyama from Angola into South West Africa, increasing pressure on land and contributing to later territorial disputes (Dobler, 2008). Under South African rule, the introduction of apartheid homeland policy in the late 1960s further reinforced the territorial separation of Owamboland, while former mission and administrative centres became important nuclei for the later growth of northern towns (Dobler, 2008).

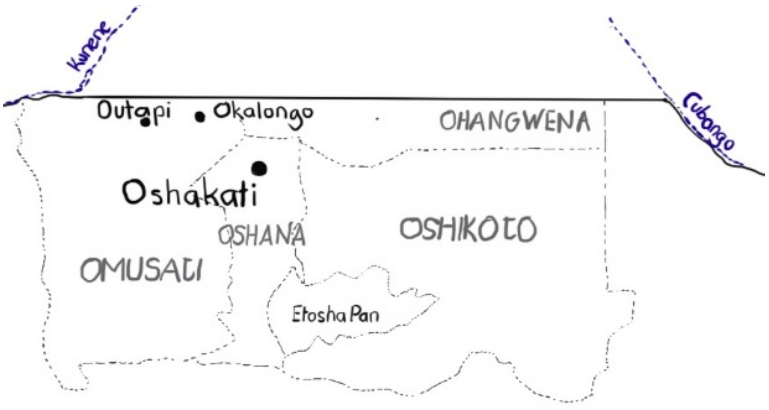

Figure 6: The north central region of Namibia known as Owamboland comprising the administrative regions of Omusati, Oshana, Oshikoto, and Ohangwena.

Prior to colonial occupation, spatial governance in north-central Namibia was embedded in kinship structures and community obligations administered through kings, councils and headmen, with land held communally under chiefly stewardship (Dobler, 2008; Werner, 2021). With German and especially South African rule, these systems were increasingly subordinated to colonial administration; in some instances chiefs were deposed and replaced by councils or headmen appointed by the state, reducing local autonomy and turning traditional leaders into intermediaries of control (Dobler, 2008). In the post-independence era, traditional authorities were re-legitimated under the Traditional Authorities Act 25 of 2000, but their role now coexists uneasily with formal planning bodies. Their authority over land allocation remains recognised in communal areas, yet it is significantly curtailed where communal land is proclaimed as urban (Traditional Authorities Act 25 of 2000; Werner, 2021). This history of appropriation and containment is important for understanding tensions at the communal–urban nexus.

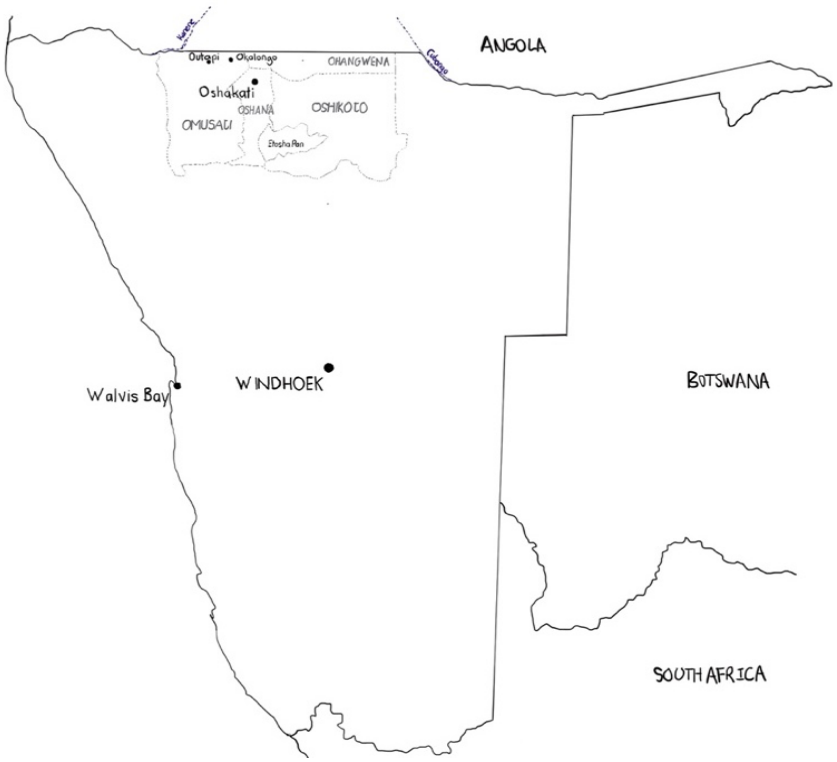

Figure 7: The administrative regions of Owamboland in north central

In 1977, South Africa created the office of the Administrator-General for South West Africa/Namibia and empowered it to legislate by proclamation. In practice, this formed part of Pretoria's strategy of "controlled change" or an internal settlement: it was intended both to relieve mounting political pressure against apartheid rule and to manage the territory's transition in the context of the UN settlement process that was later formalised in Security Council Resolution 435 (1978) (Simon, 1985; Melber & Saunders, 2007). The resulting SWA/Namibia dispensation created a multi-tiered structure of government, including local authorities, an ethnic second tier, and a central territorial tier. Within this framework, the Representative Authorities Proclamation AG 8 of 1980 authorised second-tier representative authorities for eleven officially recognised population groups, functioning as successors to the earlier bantustan and ethnic-authority arrangements (Simon, 1985; Werner, 2021). However, in urban areas, apartheid planning and local government structures were already deeply entrenched, and much of the planning and administrative authority remained centralised in Pretoria rather than in the towns and communities most directly affected (Simon, 1985, 1986).

After independence in 1990, Namibia dismantled the apartheid system of ethnically differentiated government and restructured local and regional government on a unitary constitutional basis. This restructuring was carried through especially by the Regional Councils Act 22 of 1992 and the Local Authorities Act 23 of 1992**,** which recast local government away from the representative-authority model and established local authorities as municipalities, towns, and villages. These categories carry different degrees of administrative and fiscal autonomy, with the stronger Part I and Part II municipalities enjoying broader powers and generally stronger financial bases than town and village councils (Simon, 1996; Regional Councils Act 22 of 1992; Local Authorities Act 23 of 1992; Siddle, 2019).

Today, the spatial planning of urban areas is primarily undertaken by local authorities within the legal framework now provided by the Urban and Regional Planning Act 5 of 2018**,** while communal land outside proclaimed urban areas remains under the jurisdiction of traditional authorities and the communal land administration system (Werner, 2021; Mapaure, 2009). The Act established the Urban and Regional Planning Board, replacing the old dual system centred on the Namibia Planning Advisory Board (NAMPAB) and the Townships Board, and introduced a more integrated framework for spatial planning

and public participation (Urban and Regional Planning Act 5, 2018; De Villiers, 2019). Central government still determines the broad policy framework for urban expansion into communal areas, including compensation arrangements for landholders affected by proclamation and urban development (Shilongo, 2010). More broadly, towns in the former homeland areas generally entered independence with weaker institutional and fiscal bases than long-established urban centres in the former Police Zone, and grading within the local-authority system continues to matter because it affects powers, revenue capacity, and room for administrative autonomy (Kaupitwa, 2007; Siddle, 2019).

3.4 Historical Landscape of Spatial Practice and Occupation in Outapi-Ombalantu

The Aambalantu people, who are part of the Aawambo tribe, trace their origins to the great lakes *Omatale Omanene yaNausila*[2] in Kenya. Before establishing kingdoms and clans, Amushila waNehau lyaKalimba, a non-royal figure, is said to have led the Aambalantu from the Great Lake. The emergence of clans in the Owambo community saw the Aakwanghwiyo clan becoming the royal clan of Ombalantu. This transition occurred when Kamhaku KaHuhwa, from the Nghumbi royal clan, which gave rise to the Aakwanghwiyo clan, became the first king of Ombalantu (Shivute, 2021). The lineage of Ombalanhu kings continued with Kamhaku kaHuhwa, Avula ya Epohe, Amuheli waKalipi, Ishitile yaUkahona, Eita yaAitewa, Eelu ya Elaa, and Avula yaAlweendo, all belonging to the Aakwanghwiyo/Aakwanambwa clan. They resided in the palace designated for the Ombalanhu kingship in Ohamwaala village near Outapi town (Shivute, 2021).

Outapi, sometimes also rendered Uutapi and historically associated with Ombalantu, functions as the administrative seat of the Omusati Region in northern Namibia. According to the 2011 Namibia Population and Housing Census, the urban population of Outapi was 6,437**,** while the wider Outapi constituency had a population of 36,934. The Omusati Region borders Angola to the north, Ohangwena to the north-east, Oshana to the east, and Kunene to the south-west. It comprises twelve constituencies**,** three settlements (Ogongo, Okalongo, and Onesi), four towns (Okahao, Oshikuku, Outapi, and Ruacana), and Tsandi Village Council, with Outapi serving as the administrative seat (Namibia Statistics Agency, 2014; Omusati Regional Council, 2018).

[2] This statement translates to “the great lakes of Nausila” (Naulis being belived to be a mythical/royal figure within the prehistoric governance of the lineage of the Awambo people.

Historically, Outapi lies within the area of Ombalantu traditional authority, where authority over settlement and land allocation was exercised through kings, headmen, and customary structures. A later economic profile of the town, drawing on the 2011 census, estimated Outapi's annual urban population growth at 9.3%, projecting the town's population at around 11,000 by 2017, while estimating the surrounding rural population at approximately 31,500, compared with 30,497 in 2011 as shown in **Error! Reference source not found.** below; these figures should be treated as projections rather than official census counts (First Capital, 2018).

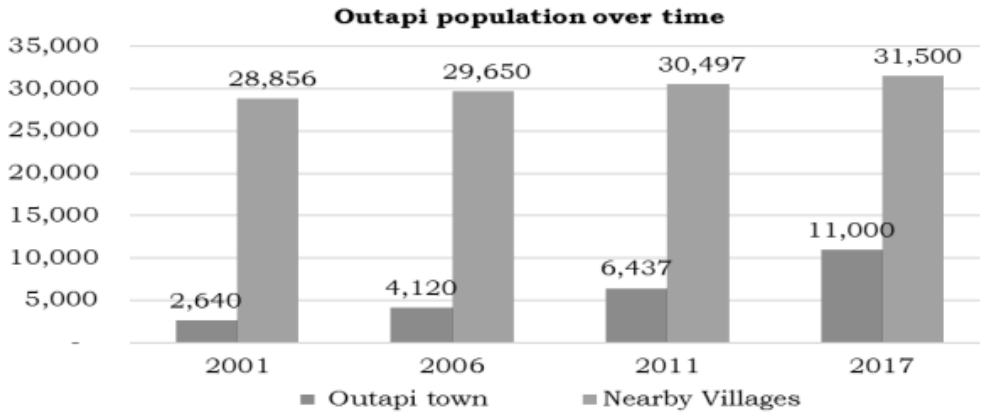

Figure 8: Outapi population trend over time: Source: 2011 Population census, Namibia Statistics Agency

Before independence, Outapi developed as a military and administrative centre, and one Namibian study notes that the town's growth accelerated in 1974/75 with the establishment of a South African military centre; the current Outapi War Museum is located at the former South African military base as shown in Figure 9 below (Iipumbu, 2006; Omusati Regional Council, 2018).

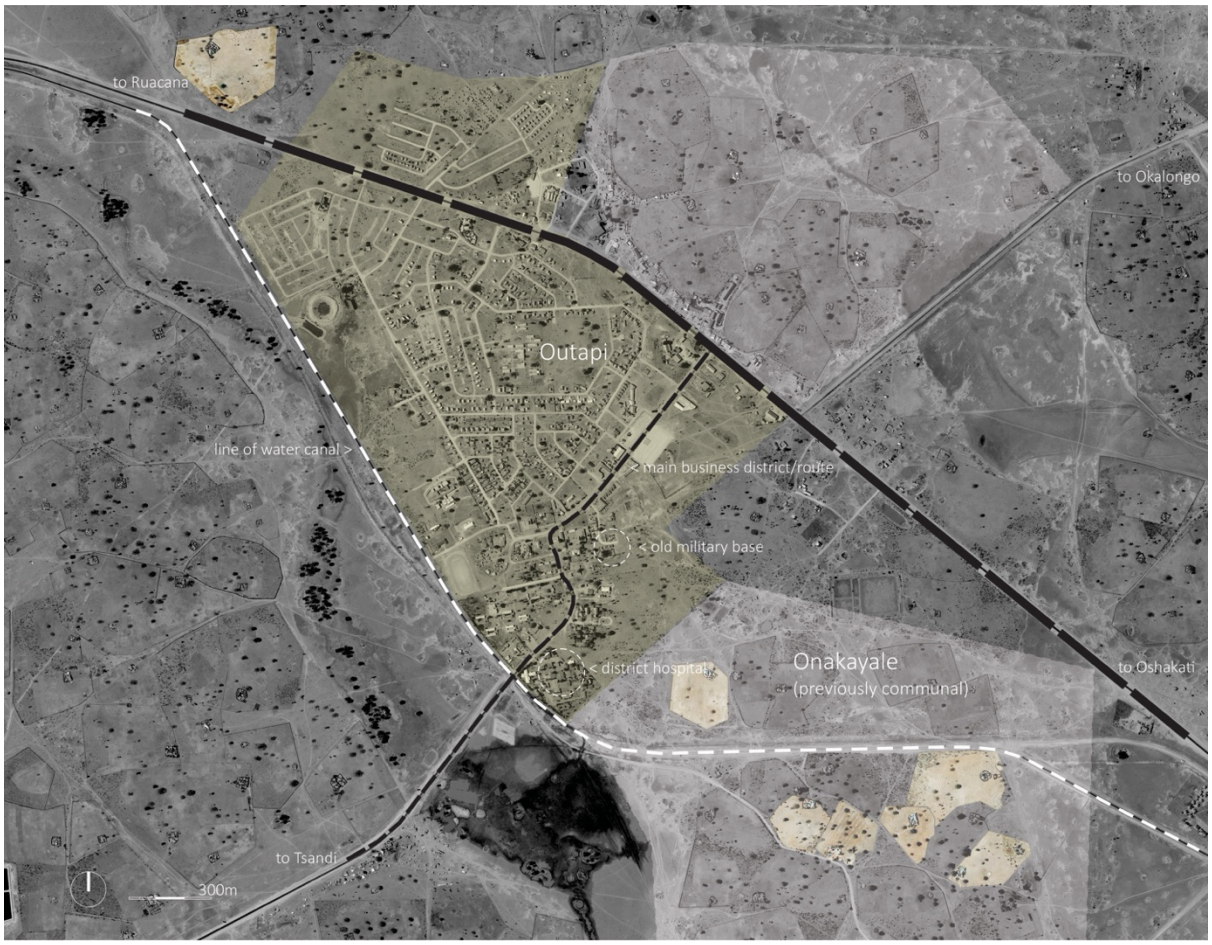

Figure 9: An aerial map of the town of Outapi. Key areas and main roads are marked, including the area of Onakayale, which is an area of communal land with homesteads recently annexed to be part of the town.

Under late apartheid, informal settlement dwellers in Namibian urban areas were often treated as "illegal squatters from the homelands" and were therefore excluded from services within formal urban areas. At the same time, settlements on the edges of northern centres such as Outapi were often treated administratively as part of the rural "homelands" under traditional authorities rather than as integral parts of the town, which produced ethnically and spatially uneven service delivery. Fjeldstad et al. further note that no village or municipal local government was instituted in the so-called homelands, despite roughly 70% of the population living there, and that these areas were instead managed through second-tier ethnic administrations on behalf of the Peri-Urban Development Board. In smaller formalised settlements in the Bantustans, administration was typically exercised through village advisory boards, while the northern war from the mid-1970s also drove the growth of informal settlements linked to

the SADF, military support activities, and displacement from rural areas in Namibia and Angola (Fjeldstad et al., 2005).

Today, local authorities in Namibia are classified as municipalities, towns, or villages, with differing degrees of administrative and financial autonomy. Regional and local government operate alongside traditional authorities, which remain important custodians of surrounding communal land. In Omusati, development coordination structures include the Regional Development Coordinating Committee (RDCC), Constituency Development Committees (CDCs), and Village and Settlement Committees, which are intended to support participatory planning and monitoring, although their effectiveness has been described as uneven. Agriculture remains central to livelihoods in and around Outapi: an economic profile based on census and household-survey material reports that 49% of Outapi households engaged in livestock farming and 63.7% in crop farming, while the broader Omusati Regional Profile describes subsistence crop and livestock production as the dominant livelihood base in the region (Legal Assistance Centre, 2017; Commonwealth Local Government Forum [CLGF], 2018; Tötemeyer, 2005; First Capital, 2018; Omusati Regional Council, 2018).

3.5 Land reform efforts

Namibia's land reform efforts have primarily focused on redistributing commercial agricultural land from white farmers to previously disadvantaged Namibians. This includes programmes like the National Resettlement Programme, which aims to address historical injustices by transferring land to landless citizens. By June 2018, the Resettlement Programme had redistributed 443 farms covering over 3 million hectares to 5,352 individuals (De Villiers et al., 2019). Despite these efforts, challenges persist in ensuring fair access and efficient land use on communal lands. Since Namibia gained independence in 1990, formalising land rights and securing tenure in communal areas has been a key focus of land reform efforts. The National Land Policy of 1998 introduced a fundamental principle that all Namibians should have equal security and recognition across customary, leasehold, and freehold tenure systems (Ministry of Lands, Resettlement and Rehabilitation, 1998). This was further realised through the Communal Land Reform Act (CLRA) of 2002, which legally recognised customary land rights and introduced leasehold rights for business and agricultural use. These rights are jointly overseen by Traditional Authorities and Communal Land Boards (CLBs), with registration formalised via the National Communal Land Administration System (NCLAS), which issues certificates to improve tenure security (De Villiers et al., 2019). By 2020, only 49%

of customary land rights in communal areas had been registered through the NCLAS; long-term leaseholds remain underreported in the Deeds Registry (De Villiers et al., 2019).

The Flexible Land Tenure Act of 2012 extended tenure reform to informal urban settlements, creating mechanisms for gradual tenure upgrades through Starter Titles and Land-hold Titles. This sought to address the legal invisibility of low-income residents in urban and peri-urban communal areas. Despite these developments, tenure insecurity remains widespread due to incomplete registration processes, limited enforcement capacity, overlapping authorities between institutions, and limited implementation of group tenure mechanisms (Mazambani & Chigbu, 2023). Nevertheless, these legislative frameworks represent significant progress toward land justice and the legal recognition of long-standing customary landholding practices in Namibia. Land and housing on communal land in Namibia are influenced by a dual system of tenure, primarily divided between freehold and customary tenure. Communal land, about 39% of Namibia's land area, is managed under customary tenure systems, administered by traditional authorities and overseen by Communal Land Boards.

In summary, although Namibia has made progress in formalising land rights and enhancing tenure security on communal land, notable challenges persist. These include economic constraints of communal land rights, insufficient compensation policies, and slow progress in reforms to enhance urban planning and land use management. Addressing these issues requires ongoing policy improvements, effective implementation, and a balanced approach that respects local customs while promoting The Housing Landscape. The housing landscape in Namibia is marked by significant challenges and complexities, influenced by factors such as rapid urbanisation, land availability, and economic conditions. Namibia has experienced one of the highest increases in house prices globally, driven by a notable disparity between housing demand and supply. Between 2000 and 2014, house prices in Namibia rose by an average of 29 percent annually (Kamati, 2019), raising concerns about a potential housing bubble. This swift price increase is linked to various demand-side factors, including real GDP growth, interest rates, inflation, and population growth, alongside supply-side constraints like limited land availability and high building material costs.

Urbanisation is a primary driver of housing demand in Namibia. The urban population has grown rapidly, with many moving from rural areas in search of better living conditions and employment opportunities. This trend is evident not only in the central parts of the country but also in smaller northern urban centres

like Outapi. Consequently, there is increased pressure on urban housing markets, particularly in Windhoek, where the population expanded by about 5 percent annually between 2001 and 2011 (Pendleton et al., 2014). High-income earners and foreign investors also play a role in driving demand, often purchasing properties for investment, which further boosts house prices. The availability of affordable housing in Namibia has not kept up with demand. A key challenge is the availability of serviced land. Acquiring and developing land is hampered by high costs and lengthy administrative procedures. Local authorities, such as the Outapi Town Council (OTC), face considerable financial limitations, making it difficult to improve land delivery processes. Moreover, the rising costs of building materials, driven by regional construction booms and inflation, have further increased the expense of housing development.

Both the Namibian and South African Constitutions address socio-economic rights. Namibia's 1990 Constitution incorporates these rights from the International Covenant on Economic, Social, and Cultural Rights, including the right to adequate housing. However, this right is not explicitly stated. Several legal instruments govern the housing market in Namibia, including the National Housing Policy, the National Housing Development Act of 2000, and the Local Authorities Act of 1992. These policies aim to facilitate access to affordable housing and serviced land. Despite these efforts, a substantial housing shortfall remains, emphasising the need for ongoing policy review and improvement to meet the changing housing market conditions. The Namibian government has implemented various policies and programmes to increase housing supply and enhance affordability. The National Housing Enterprise (NHE) focuses on providing low-income formal housing, but its delivery scale has been limited. From 2000 to 2006, NHE managed to supply only 3,245 houses (Haipinge, 2018). Other initiatives, such as the Shack Dwellers Federation of Namibia, have used group savings and incremental housing approaches, successfully addressing housing needs for the lowest-income groups.

The housing market in Namibia faces a complex interplay of demand and supply factors. Rapid urbanisation, high demand from both local and foreign buyers, and constrained housing supply have contributed to significant house price increases. While government policies and initiatives have advanced, challenges remain in scaling affordable housing solutions and managing land resources effectively. Addressing these issues requires a concerted effort from both the public and private sectors to ensure sustainable and inclusive housing development in Namibia. Many people in Namibia, especially in rural areas, cannot access traditional home loans or urban freehold land due to poverty and limited disposable income. This has led to a significant housing backlog and poor living conditions in rural communities. In

response, Namibia's housing policies also seek to address urban-rural disparities by creating housing opportunities in rural areas, encouraging integrated development approaches, and using alternative technologies to improve affordability and sustainability.

The Local Authorities Act requires local authorities to establish housing schemes to address local housing shortages. Housing in settlements and growth points in rural areas is supported through programmes such as Sustainable Incremental Greenfield Development (SIGD) and Participatory Informal Settlement Upgrading (PISU), with technical assistance from Regional Technical Teams (RTTs). The Decentralized Build Together Programme (DBTP) and the NHE also have important roles in housing provision, although the NHE does not construct in communal land areas. Homebuilders in rural areas, outside settlements or growth points, can access building materials support under the Housing Subsidy Framework (HSF), provided they hold formal land rights, such as a 99-year lease or recognised communal land rights.

3.6 Land Markets

Land in Namibia is managed through a dual system of tenure, consisting of freehold land and communal land. Freehold land is mainly located in urban areas and on commercial farms, while communal land is mostly found in rural regions and reserved for use by indigenous communities.

Freehold land, which makes up about 43% of Namibia’s land area, is privately owned and can be transferred, bequeathed, or used as collateral for mortgages. It is governed by the Agricultural (Commercial) Land Reform Act of 1995, the Subdivision of Agricultural Land Act, and the Deeds Registries Act of 1937. Ownership and transactions involving freehold land are thoroughly documented, with rights upheld through the civil court system (De Villiers et al., 2019).

Communal land, which makes up about 39% of the country, is held in trust by the state but managed by traditional authorities under customary tenure systems. These lands are vital for the livelihoods of roughly 70% of Namibia's population, who depend on subsistence farming (De Villiers et al., 2019). The Communal Land Reform Act of 2002 allows individuals to register their land rights through traditional authorities, covering residential areas, crop fields, and some grazing lands. This Act provides for the formalisation of land rights in communal areas through written approvals by the Traditional Authority. Land rights on communal land are not transferable under this Act, ensuring that the wellbeing of often poor communities

on communal land is not worsened after they sell their land. It is understood that communal land exists to support the livelihoods of its inhabitants. Therefore, while land rights, which are the rights to have primary use of the allocated land, can be traded, ownership cannot. However, this system faces challenges such as incomplete registration, overlapping rights, and the privatisation of common resources by wealthier individuals, which often leads to disputes. Additionally, there is a growing market for communal land, expected to expand through leasing and selling properties (Mendelsohn & Nghitevelekwa, 2017).

3.7 Access to communal land rights

The process for allocating communal land rights involves submitting a written application on the prescribed form to the Chief of the traditional authority where the land is located. The application must include all necessary documents for review. The Chief or Traditional Authority can investigate and consult relevant individuals regarding the application. If objections arise, a hearing is held where both the applicant and objector can present their cases. After reviewing the matter, the Chief or Traditional Authority may approve or deny the application. If approved, the Communal Land Board must ratify the allocation to make it legally valid. The Chief or Traditional Authority must notify the Board within 30 days of the allocation, providing all relevant details. The Board assesses whether the allocation complies with the Act and can ratify it, request reconsideration, or veto it if it breaches certain conditions, such as overlapping rights or exceeding maximum land size. Once ratified, the Board registers the right and issues a registration certificate to the applicant.

According to the Communal Land Reform Act, when the holder of a customary land right dies, the right automatically reverts to the Chief or Traditional Authority for reallocation. The Chief or Traditional Authority must allocate the right to the surviving spouse if they agree to accept it. If there is no surviving spouse or if the spouse does not accept the allocation, the right can be allocated to a child of the deceased. Under customary law, the Chief or Traditional Authority decides which child is entitled to the allocation. However, this process can potentially discriminate against female children or younger sons, which may conflict with constitutional principles promoting gender equality (Mendelsohn, 2008). If there is no eligible surviving spouse or children, or if they all refuse the allocation, the land right becomes available for allocation to another person.

Having secure tenure over land and the option to leverage its value motivates landowners to dedicate resources to improve and maintain their properties. Such incentives are essential for economic growth.

However, the Communal Land Reform Act of 2002 presents some barriers that hinder economic progress and better living conditions, according to Shiimi (2011), namely:

Collateral and Capital: The inability to register land rights as legal deeds prevents their use as collateral. This restriction excludes about half of the population from accessing funds secured by land, a benefit commonly available to the rest of Namibia. Consequently, 38% of the nation's communal land is considered 'dead capital', lacking any financial value (Mendelsohn, 2006), and

Tradability: A common belief is that land rights cannot be transferred, influenced by Section 42 of the Act, and that communal land is owned by the state (Section 17). While Section 38 allows the transfer of customary land rights and leaseholds, such transactions require approval from traditional authorities. This requirement complicates transfers and supports the view that land rights are not freely tradable and are under the control of these authorities. Additionally, when a landowner dies, their land reverts to traditional authorities before possibly being inherited by heirs.

The Act, together with the Compensation Guidelines for communal land, permits the payment for improvements made to the land. This often encourages people expecting urban expansion onto their communal lands to make small, spontaneous improvements to their properties to gain greater financial compensation (Mendelsohn, 2006).

3.8 Compensation for Communal Land

In terms of compensation for communal land, the valuation and compensation policies have been a significant issue.

Although Namibia's planning apparatus has been racially integrated since independence in 1990, the ideological and technical structures of urban development still reflect colonial-era rationalities. Contemporary planners, many of whom are Black professionals working within inherited legal frameworks, apply systems aimed at formalising and commodifying land in ways that exclude communal or indigenous logics. This highlights a key issue: while the racial identity of implementers has evolved, the politics of spatial production remain unchanged. The compensation policy, for instance, is managed by state actors who seldom question the modernist assumptions underlying the valuation of land and housing. (This is shown by the fact that the inputs collected for the revision of the compensation policy

specifically solicited revised financial amounts for elements such as huts and trees, which are compensated for). These actors operate within institutions structured around technocratic logic, often detached from the lived realities of homesteads. The politics of policy implementation are inherently partisan; decisions about who qualifies for compensation, how value is calculated, and what constitutes "development" (as discussed earlier in section 2.2) are intrinsically political acts. However, this political economy of compensation is often concealed by the bureaucratic nature of the process.

Regarding where there is an expansion of an urban area, affected communal homestead residents are presented with a few options per the guidelines for the compensation of the communal land policy. Option 1 applies to affected communal land greater than 500m², where there is a homestead, cultivated land, uncultivated land, and other improvements. It provides two residential erven, each measuring at least 500m² but not exceeding 1000m², transferred free of charge to the occupant's name. One erf will be located where the present homestead is, and the other adjacent to it or any other available erf that the owner can sell ("voetstoots"[3]). The acquiring authority is responsible for providing both erven with municipal services, such as water and electricity, free of charge. However, the owner will pay for the usage of these services. Compensation for other affected improvements will follow the guidelines in Part D[4] of the policy, excluding the improvements on the 500m² erf with the homestead. Suppose the area where the erven are located is not zoned for residential use. In that case, the occupant will be provided with alternative residential land, and any improvements on the homestead will be compensated according to Part D. If this option is chosen, the acquiring authority or relevant ministries will not be required to provide additional alternative land elsewhere. Option 2 applies to affected communal land less than 500m² with permanent or temporary improvements for dwelling purposes. A cash amount determined by the Government Valuer will be provided for structures made of corrugated iron that are not permanent, and the acquiring authority will arrange transportation. For conventional buildings (brick walls, IBR roof, grano or tiled floors), compensation is set at N$3,000/m², adjustable based on the building's quality, condition, and workmanship, as determined by the Government Valuer, who will also update the amount to reflect current market rates. If there are fruit-bearing trees or cultivated land, compensation will be determined

[3] sold or purchased without guarantee or warranty; at the buyer's risk

[4] Part D pertains to the determination of compensation for land, improvements and disturbance in the policy. It includes per square meter rates for cultivated land, grazing/uncultivated land, built structures, fruit bearing trees per species, and an allowance for disturbance.

according to Part D. Option 3 is for those opting for alternative land to continue farming. The government will strive to provide land of similar size, ideally within the same traditional authority jurisdiction. If insufficient or unavailable, relocation to another traditional authority area with available land will be considered, in consultation with relevant Traditional Authorities. Additionally, compensation for the loss of use of the land and other improvements will follow Part D guidelines, with the acquiring authority arranging transportation. The compensation policy for communal land of 2009 provides rates of N$600 per hectare for cultivated land and N$250 per hectare of uncultivated land, which are significantly below market rates (The National Compensation Policy Guidelines, 2009). This discrepancy often results in insufficient compensation for affected land right holders on communal land, failing to adequately reconstruct their livelihoods post-expropriation. Additionally, the methodologies for valuing communal land are inadequate, as they are based on principles of transferable ownership and market transactions, which do not apply well to communal lands. Traditional customs and practices sometimes also conflict with modern legal frameworks, particularly affecting women and marginalised groups who often face disadvantages in land allocation and representation in decision-making bodies.

Highlighting the gap between reality and tenure limitations, many holders of customary land rights do utilise their properties for commercial purposes, particularly through rental units and small shops commonly referred to as *cuca shops*. Similarly, land rights are frequently sold in communal areas. Due to the informal nature of these transactions, poorer residents often receive inadequate prices for their land. This issue has been particularly prevalent among communal landowners whose properties have recently been incorporated into designated urban areas.

3.9 Rights over common resources on communal land

Communal commonage provides rural residents with vital resources that support their livelihoods, including grazing lands, firewood, timber, fruits, bush meat, and water. However, residents lack mechanisms to secure land rights over these areas, which can be privatised at the discretion of the state or traditional authorities. Except in conservancies and community forests where some revenue-sharing exists, residents cannot earn income (e.g., grazing fees) from outsiders who commercially exploit commonage resources. Government policy emphasises that communal land should remain freely available for settlement, particularly to benefit poorer citizens who cannot afford land elsewhere. This principle is enshrined in the Communal Land Reform Act of 2002, which states in Article 17(1) that “Subject to the provisions of this Act, all communal land areas vest in the State in trust for the benefit of the

traditional communities residing in those areas and for the purpose of promoting the economic and social development of the people of Namibia, in particular the landless and those with insufficient access to land who are not in formal employment or engaged in non-agricultural business activities."

However, communal land is also accessed by wealthier individuals, many of whom have gained extensive farming areas through their influence. The privatisation of commonages has occurred through three primary pathways: (a) allocation from the South African administration or subordinate authorities before independence, (b) direct allocation by traditional authorities, and (c) unilateral fencing of land by private actors. The extent of this privatisation has been widely described as a modern form of land grabbing. As a result, the long-standing perception of commonage as a free resource for local households has diminished, undermining its role as a safety net for vulnerable groups. Beyond initial land allocation, traditional authorities generally have a limited role in the daily management of communal land. With some exceptions, they do not regulate grazing levels or the harvesting of natural resources such as timber, thatch, fish, wildlife, firewood, or fruit (Mendelsohn, 2008).

The lack of regulation fosters open access, encouraging individuals to maximise short-term extraction, as captured by the concept of the "Tragedy of the Commons" (Hardin, 1968). This dynamic often disadvantages poorer households, accelerates environmental degradation, and benefits wealthier actors who can exploit resources on a larger scale. Research shows that much of the grazing on commonage is appropriated by wealthier livestock owners, many of whom earn their income from businesses or salaries in towns rather than from local agricultural activities (Mendelsohn, 2006). Large-scale farmers often use a dual grazing system: moving herds onto communal pastures until they are depleted, then returning them to privately enclosed fields. The lack of secure tenure over commonage, therefore, exposes residents to exploitation by networks of wealth and influence. Traditional authorities and non-resident livestock owners often benefit from the absence of regulation, and their influence has ensured that measures against land grabbing remain unenforced, despite prohibitions under the Communal Land Reform Act (Werner, 2011). In some cases, even water points and drought-relief grazing reserves established by government have been captured for private use. In this context, local residents, especially the poor, possess little leverage to protect their rights.

3.10 Traditional Authorities and Indigenous Spatial Practices Today

The various Owambo traditional authorities in northern Namibia are among the most well-established TAs in the country. They have histories spanning many centuries, demarcated territories they govern, and customary laws and practices that continue to this day. The central government recognises these traditional authorities through the Traditional Authorities Act 25 of 2000. This Act governs their structure, enabling them to operate autonomously and ensuring clear channels of communication with the central government. The TAs consist of a chief, known in Oshiwambo as Elenga or Omukwaniilwa, who presides over committees responsible for administering the territory and maintaining customs and cultures, or onfiiluwakalo. Through this framework, they oversee customary land rights within their communal lands and regulate their inheritance and transfer from one person to another. To a large extent, traditional authorities in Owamboland act as primary spatial practitioners at the rural settlement level, determining where new households are established, allocating land, maintaining customary land rights or titles, adjudicating land disputes, and participating in the allocation of land for urban development.

For many centuries, their spatial planning has been influenced by factors such as the customary beliefs and traditions of each subgroup, the natural environmental conditions within their territories, and socio-political and economic histories. Like many cultures across the African continent, there is limited local literature documenting the history of these TAs and the communities they serve. Most existing literature is Western and tends to overlook differences in settlement patterns among the subgroups and the factors influencing these patterns. An important source of understanding is through naming. For example, the word ‘ombalantu’ comprises two words: Mbala, meaning ‘area’, ‘place’, or ‘territory’, and yantu, meaning ‘people’s’. This reflects the political history of this subgroup and its territory, which lacked a distinct leadership and was governed by the people themselves. This information is preserved mainly through oral history and naming, yet it also offers explanations and insights into the differing spatial practices of the subgroups, as discussed in subsequent sections of this chapter.

3.11 Housing and Land Practice: Communal Land versus Urban Land

In Namibia, urbanisation is driven by rural-urban migration, a phenomenon also observed in urban areas surrounded by communal lands in northern Namibia. Urban regions are associated with opportunities for

employment, services, and an improved quality of life (Pendleton et al., 2014). Although various rural development initiatives commenced especially after independence in 1990 as part of government efforts to develop rural areas, urban centres in Namibia, like in many parts of the Global South, continue to attract people from rural regions. While both urban and communal land issues were addressed at the First Land Conference in 1991 and the Second Land Conference in 2018, rural land resettlement programmes took precedence over urban land provision in the years following independence. At the time of the First Land Conference in 1991, only 28% of the population resided in urban areas. The emphasis gradually shifted due to mounting pressure on the government and local authorities caused by the influx of rural populations moving towards urban centres.

By 2018, half of Namibia's population lived in urban areas. The discussion on urban land has expanded beyond mere housing within four walls, encompassing livelihoods and housing issues through civil society and community contributions. Engagement between civil society, the state, and land and housing seekers has focused on land provision for housing, formalising land occupied by informal settlements on urban peripheries, legal and financial support for self-help housing schemes through initiatives such as the Build Together Programme (BTP), the Shack Dwellers Federation (SDF), and the Namibia Housing Action Group (NHAG), as well as the direct supply of housing units via government interventions with the NHE and the now-suspended Mass Housing Programmes. In Namibia, 89% of households report a monthly income below N$10,000.00, and many workers in informal economies lack access to formal housing markets (Luhl & Delgado, 2018). From the government's perspective, housing provision primarily involves granting freehold titles to those below the income inequality gap and addressing the housing backlog. However, challenges persist, such as the high costs associated with servicing land (installing water, electricity, and sewage can cost up to N$50,000) and the legally mandated minimum urban erf size of 150m², which further increases land delivery costs (Weber & Mendelsohn, 2017). These conditions have resulted in sprawling informal settlements on the outskirts of Namibian urban areas, including in the North Central Regions.

The Local Authorities Act No. 23 of 1992 enables local authorities to create reception areas, providing land and basic services for informal settlements with plans to relocate residents to formal urban zones later. This was especially relevant post-independence, anticipating increased migration to urban centres such as Windhoek. Legislative measures aimed at expediting land delivery include the Flexible Land Tenure Act, which introduces a parallel, more affordable land registration process for informal settlers upgradable to

freehold titles once requirements are met and the new Town Planning Act, which modifies the composition of the Township Board to speed up the proclamation of new townlands. Despite these developments, social practices have not significantly influenced housing delivery methods, housing typologies, or neighbourhood design. Consequently, the predominant urban housing form remains detached, sprawling suburban units. The pressure on local authorities, particularly those in recently proclaimed northern Namibia, further encourages this development pattern through practices such as selling land to developers, who then subdivide it and sell plots via plot and plan initiatives. Local authorities are legally mandated to participate in housing development at the local level, leading them to spearhead expansion efforts and apply for additional communal land to be incorporated into urban areas.

Before colonial rule in Namibia, land was managed communally under tribal leaders and customary practices. The currently recognised communal areas are remnants of the apartheid-era 'reserves' and 'ethnic homelands', which were designated for the separate development of native populations and the control of migrant labour to enable resource extraction in the south. The organisation of space, domestic life, housing, and land management remained fairly stable until Finnish missionaries introduced religious practices, followed by the migrant labour system. This system removed men from their communities but also brought a cash-based economy through circular migration. The migration of men from these homelands disrupted local customs, as young men played key roles in establishing homesteads and providing labour for subsistence activities. Throughout colonial and apartheid periods, communal areas remained underdeveloped, with the apartheid government focusing on controlling their expansion by establishing strict borders around the homelands.

Post-independence, the engagement between the independent government and civil society regarding communal land has primarily resulted in resettlement programmes, which, since independence, have in many years cost up to NAD 2 million per beneficiary (Werner, 2015). This is mainly because, in 1990, there was a consensus that communal land forms the basis of livelihoods, and issues of access and tenure security needed urgent resolution, especially concerning the historical dispossession of land. Much work has been done to reform access to communal land. Beyond serving for homesteads and subsistence farming, communal land also provides sites for urban expansion, tourism conservancies, mineral exploration, and other lucrative ventures. Until 2002, Namibia lacked a legal framework for communal land administration. It was administered solely by Traditional Authorities under customary law and practices. In 1996, a conference was held to discuss the proposed communal land bill, which laid the

groundwork for recognising Traditional Authorities (TAs) in land administration, along with establishing procedures for registering communal land titles. This led to the enactment of the Communal Land Reform Act (Act No. 5 of 2002), which established communal land boards working alongside Traditional Authorities to ratify land titles issued by TAs. TAs continue to manage land within their areas in accordance with customary practices, which form part of the stories and experiences in the case study homesteads examined later in this chapter. For instance, women are often excluded and disadvantaged in land and homestead ownership because the male is regarded as the head of the homestead; thus, if the husband passes away, women may be left without secure tenure.

When compensation is paid for relocating a homestead, it is often given to the male head of the household, excluding women from financial decisions that affect them. This issue was addressed at the Second National Land Conference through a resolution to ensure women's access to land. The resolution called for reviewing all policies related to land to protect and prioritise women, who are historically disadvantaged in this aspect (Ministry of Land Reform, 2018). The communal land boards provide legal backing for land rights issued by Traditional Authorities, whose previous allocations were often oral and led to disputes, which were also managed by TAs. The resolutions from the second conference also committed the government to assist with relocating those impacted by town expansion onto communal land and to ensure all family members are consulted before land is registered in any family's name. Traditional Authorities and communal land boards offer different types of land rights, each granted for a specific period: customary rights (limiting use to homesteads and cultivation), leasehold rights for businesses, and occupational rights (leasehold) for public facilities like schools and clinics. Today, the land and housing market at the heart of urban expansion on communal land is a direct result of a market-oriented economy, which is seen as the only way to alleviate poverty often associated with rural and communal areas (Nghitevelekwa, 2022). Consequently, urban expansion is frequently called "development" and is implemented with little resistance.

3.12 Summary

The chapter outlines how Namibia's current land and housing situation is rooted in a complex historical trajectory and provides a contextual analysis of this intersection leading into the findings chapter. In the pre-colonial era, diverse indigenous groups (e.g. Owambo, Herero, Nama) managed land communally under traditional authorities, with settlements organised around homesteads, kraals, and fields guided by

customary practices and the environment. Colonial interventions profoundly disrupted these systems. First, the German and then South African rule imposed new boundaries and dispossessed communities of land in central and southern regions, though Owamboland in the north largely retained its communal tenure under chiefs and headmen during the colonial period.

After independence in 1990, Namibia maintained a dual land tenure system – private freehold vs. communal land, and convened land reform conferences (1991, 2018) to address historical inequalities. Early policy, however, emphasised rural resettlement of dispossessed communities over urban land needs, since only about 28% of the population was urban in 1991. Over time, urbanisation (now about 50% urban by 2018) shifted policy focus toward city land and housing challenges. The Traditional Authorities Act (2000) legally recognises these bodies, allowing them autonomy in administering customary law and land within defined territories. TAs oversee where new rural homesteads are established, allocate residential and farming rights, maintain local land records, and resolve disputes. They also coordinate with government when communal land is earmarked for urban expansion, ensuring local input. The chapter underscores that local spatial planning in Owambo communities has always been a holistic process in which decisions on settlement layout consider cultural norms, kinship ties, environmental factors (like avoiding low flood-prone ground), and clan history. Even today, a new homestead's placement and design might be guided by elders' knowledge, often resulting in similar layouts among related families.

While TAs remain the primary agents of land allocation in rural areas, their authority is now moderated by statutory bodies (Land Boards) and national laws. Nonetheless, indigenous socio-spatial practice remains influential at the grassroots. Notably, post-independence policies like the National Resettlement Programme transferred over 3 million hectares of former white-owned farms to thousands of landless Namibians. Yet communal areas still face inequities: customary lands (about 39% of Namibia) remain under traditional jurisdiction with oversight by Communal Land Boards. Namibia's land reform efforts have made strides in formalising land rights (e.g. the Communal Land Reform Act 2002), but significant challenges persist, including economic limitations of communal tenure, inadequate compensation policies, and slow implementation of planning reforms. Thus, the historical-policy landscape sets up a tension between maintaining traditional communal practices and pursuing modern, equitable development.

A central theme is the intersection of modern law with communal land rights. Namibia's dual tenure system distinguishes freehold land (about 43% of land, privately owned, transferable, and used for collateral) from communal land (about 39%, held in trust by the state but allocated by traditional authorities under customary tenure). Communal lands support 70% of Namibians who practice subsistence livelihoods. Legal reforms now allow customary landholders to register land rights through traditional leaders and land boards, strengthening tenure security while prohibiting outright sale of communal land to protect vulnerable communities. Access to communal land is managed via applications to local chiefs and ratification by Communal Land Boards, which formalise allocations and ensure compliance with the law. Inheritance remains governed by custom: upon a holder's death, rights revert to the chief for reallocation (often to a surviving spouse or heir). With rapid urban expansion, communal land at the urban-rural fringe has become a target for incorporation into towns, raising contentious issues of compensation. The chapter has detailed Namibia's communal land compensation framework, which offers displaced rural homesteads several options when their land is annexed for urban use. For example, if a large homestead (>500 m^2) is absorbed into a town, the occupants may receive two serviced urban plots (erven) free of charge. One of the erven is on their former homestead site and the other is selected nearby in consultation with the recipient. Smaller affected plots or temporary structures may receive cash payouts based on government valuations (e.g. ~N$3,000 per m^2 for permanent structures).

This chapter noted a pattern in northern Namibia where urban needs are prioritised over traditional land uses. When town boundaries extend, existing homesteads are often dismantled or relocated and sometimes replaced by grid-laid informal settlements or new developments. Residents do receive compensation (as discussed), but this process effectively displaces local socio-spatial practices and domesticity, substituting them with urban land uses. This encapsulates the human impact of the urban-communal land intersection. Urban expansion into communal areas is frequently portrayed as "development" and is met with little resistance, in part because it aligns with a market-driven, anti-poverty narrative.

In conclusion, this chapter synthesised how land reforms, housing pressures, and indigenous spatial practices converge in Namibia's north. The urban–rural nexus is marked by dualities: freehold vs. customary tenure, formal urban housing vs. vernacular homesteads, state planning mechanisms vs. traditional authority. These dynamics produce a complex socio-spatial landscape where progress and problems coexist. On one hand, formal policies (land boards, flexible tenure, housing schemes) seek to

bridge traditional and modern systems, aiming for equitable access to land and shelter. On the other, gaps in implementation and the dominance of market paradigms risk undermining communal practices and exacerbating inequalities.

Chapter 4: Methodology

4.1 Introduction

The theoretical proposition in the Literature review chapter introduces grounded theory as a lens to investigate domesticity at the intersection of urban and communal land in northern Namibia (Owamboland). This is supported by concepts from Assemblage thinking, which proposes methods that move away from dualist explanations of social aspects in cities and their associated approaches such as structure and agency. Assemblage also rejects essentialist conceptualisations of urban areas and employs a theoretical stance aimed at uncovering emergent entities and relational aspects, focusing on both human and material actors. Urbanisation is recognised as a layered process, with the assemblages that constitute it considered political, although this is not always reflected in urban studies employing assemblage thinking. Furthermore, the preceding chapter has outlined how Namibia's current land and housing situation is rooted in a complex and layered historical trajectory, offering a contextual analysis of the intersection of housing, land, and spatial practice across various periods in Namibia's spatial history. This historical background has also motivated the application of Grounded Theory (GT), the use of which is detailed in the sections below. The methodology chapter clarifies the researcher's positionality to motivate the choice of methods and theoretical stance.

4.2 The researcher's positionality

The researcher's positionality has influenced the study's focus, methodology, and theoretical outlook. He was born in Ohamautsi at a small clinic within the Catholic mission marked on Figure 25 under section 5.4, which, along with Onakayale, forms the primary focus areas of the research within the Mbalantu communal land. He later moved to Windhoek with his mother at the age of five to commence primary school. Although most of his childhood was spent in Windhoek, where he attended school, mid-year school breaks and December months were spent at the homestead marked as Case 1 (and homestead 1 on the communal land in the typomorphological survey), as detailed in the findings chapter. This is the home of his biological mother. The researcher maintains some links to most homesteads included in the typomorphological survey, many of which he has visited personally over the years. Additionally, his biological father's homestead is included in the findings as Case 5, although it is not part of the typomorphological survey since it has not yet been incorporated into the formal townlands. The researcher's experience at the homestead was mainly as a child growing up, differing from that of a

homestead head or an adult in the homestead. During visits, he gained an intimate understanding and experience of the domestic life typical of the Owambo homestead, including the gendered division of spaces and activities. He grew up engaging in subsistence activities such as cattle grazing, seasonal ploughing and harvesting, and maintaining the homestead infrastructure.

The spatial layout of the homestead was central to shaping everyday life. It consisted of distinct areas such as the oshoto, epata, sleeping rooms across various modern and vernacular buildings, and livestock kraals. The homestead operated as a system of demarcated yet interconnected spaces. Access and circulation were influenced by age, gender, and purpose, reinforcing functional roles and social hierarchies. Daily routines followed a cyclical rhythm closely tied to the natural environment and collective responsibilities. Family life was rooted in a broader kinship network extending beyond the immediate household. Elders played vital roles as custodians of knowledge and authority, with respect for age and lineage expressed through daily interactions. Every evening, the family gathered at the oshoto for devotion, singing praise songs and reading biblical scriptures. The oshoto was also where the younger boys, including the researcher, received guidance from the homestead head, his grandfather, on behaviour and social skills. The same occurred for the younger girls during food preparation and cleaning. Disputes were settled internally, often at the oshoto, through dialogue facilitated by senior family members and the homestead head, establishing the homestead as a centre of governance and social regulation. For both male and female children, much of their daily life also took place outside the immediate homestead.

During the summer months (from December to May), while the sorghum crops grew before harvest, the researcher often spent days outside under the shade of the marula tree, inspecting the crops to prevent goats from grazing on them. These hours were often spent playing and bonding with other children. From an early age, children participated in chores such as sweeping the yard, fetching water, pounding *mahangu*[5], or herding livestock. These tasks were not merely labour obligations imposed by elders but also served as a means of intergenerational knowledge transfer and socialisation into communal values. Participation fostered a sense of discipline, resilience, and belonging in the collective. To the researcher, the homestead was a space of play, imagination, and sensory experiences. Children played with found objects, crafted toys from natural materials, and created stories reflecting adult roles and routines. It is

[5] *Mahangu* is a Staple crop in northern Namibia

important to acknowledge his relationship with the community where the research takes place. Emphasising that this research is about 'us' and not 'them', and beyond understanding an aspect of urbanisation in northern Namibia, the study also enriches knowledge of the researcher's culture and community. This research holds personal significance for the researcher, as their culture, language, and heritage are Owambo, from the Ombalantu subgroup. The researcher is eager to understand how the cultures of the homes and places he has lived in are evolving, as well as to generate local insights about Owambo architecture (Ombalantu subgroup), spatial production, and current practices. As an architect with a broad interest in domesticity and spatial production in post-colonial spaces, it is essential to produce localised insights such as this autoethnography that influence approaches to urbanism.

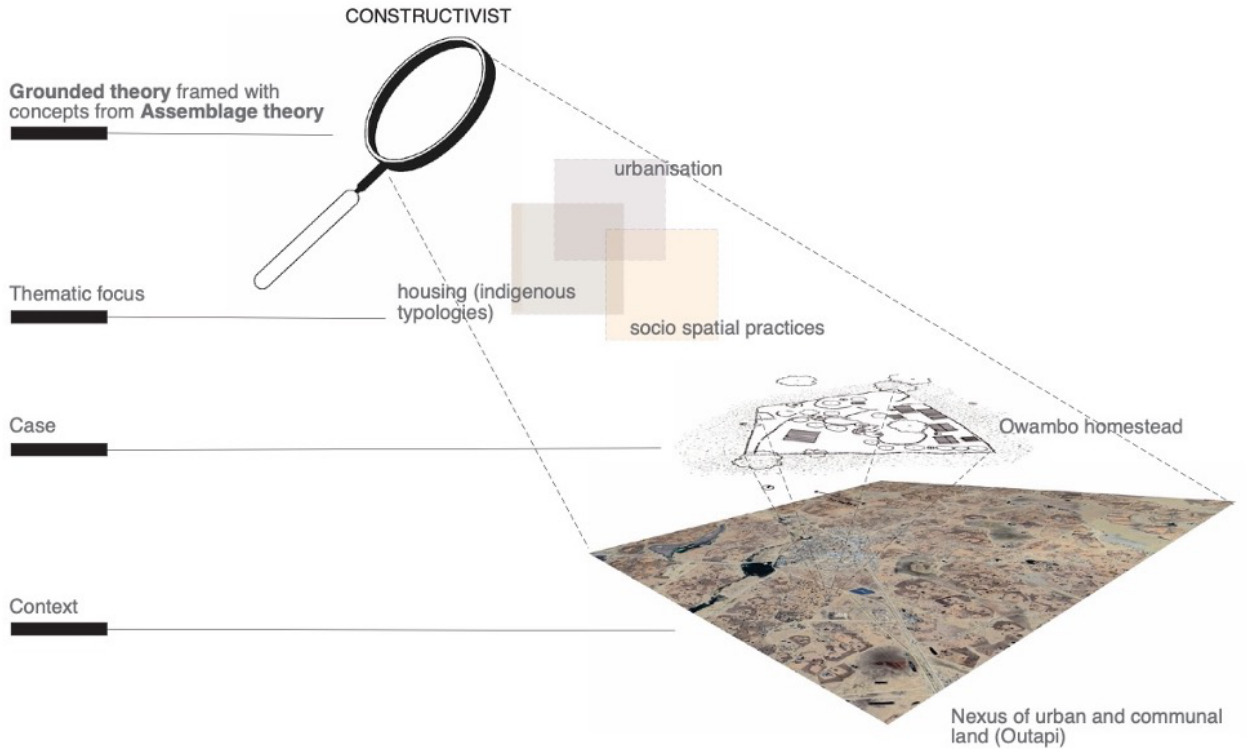

Figure 10: Conceptual diagram by the author outlining the research focus across the context, case, themes and theory.

4.3 Selection of study area

Assemblage theory and Grounded methodology engage using a bottom-up approach, setting aside any assumptions or presumptions which may be present when thinking about the nexus, therefore the method employed for the research is a case study. The selected case study area for the research is Onakayale, south of Outapi. Outapi was selected as the case study area for the research due to the fact

that the researcher is originally from the surrounding communal lands, and thus the researcher's resources are concentrated in this area. An exploratory fieldtrip was conducted in the selected area (Onakayale) to sensitise the Traditional Authority (TA), Local Authority (LA), and homesteads about the research questions, aims, objectives and limitations. The exploratory fieldtrip also informed the methods and selection of homesteads by providing a better and more informed understanding of the urban development processes occurring on the ground.

Thereafter, a snowball sampling technique was employed to identify and solicit the consent and participation of other homesteads in the research. It is important to note that there were only a few relevant areas in Outapi as the research focused on areas which were recently (as of 2011) included into the urban boundary of the town as shown in MAP 1 under appendices. The area of Onakayale emerged as one of two areas which would meet this criterion. The specific homesteads in Onakayale were later selected based on their expressed interest to participate in the research after informal conversations with the researcher to solicit participation. During the exploratory research trips, these participants acted as multipliers to introduce the researcher to the next participants in the same area. The narrative interviews were conducted with residents in the homestead (often the head of homesteads and others where the heads of the homesteads were not available). The captured data in the form of audio recordings, sketches, field notes and photographs were sorted and classified according to two scenarios (1) homesteads which have upgraded to the urban standard, and (2) homesteads which have decided to relocate and re-establish in another area of communal land.

Firstly, the researcher was sensitised to the major concern held by the residents about the urban development and town planning practices relating to the compensation of communal land. In essence, it was clear that the researcher would not be able to avoid the need for the residents to use the opportunity to disclose their displeasure with the Guideline for Compensation for Communal land policy document, as well as its interpretation and the execution of financial evaluations of their existing homesteads as per this government policy. This information was important because it sensitised the researcher to the most sensitive aspect of the entire process, from the perspective of the community, and also allowed the researcher to prepare to sensitively direct participants towards the focus of the research, which was the domesticity and socio-spatial aspects of the homesteads at the nexus of communal and urban land. The participants' narrative discourses and the supporting observations later proved to be more interconnected than initially assumed by the researcher. Furthermore, the exploratory field research was

instrumental in considering the category of homesteads which have opted to receive compensation to relocate as important sites for investigation. This expanded the concept of the 'nexus' within this research further beyond newly proclaimed urban land which was previously communal land, to include homesteads which were now in communal land, but had still encountered urban development practices, and thus were considered part of the *nexus*. Engagement with traditional authorities was seen as essential to the success of the research. A Comprehensive Research Proposal was presented to the representatives of the Mbalantu TA, who subsequently provided the required endorsement which the researcher could use to solicit consent and participation amongst the community of homesteads in the Onakayale area. Figure 11 shows the area of Onakayale in Outapi, and exposes the larger-scale changes in the spatial characteristics of Onakayale (see the removal of fences around fields and summary notes on the changes) since the proclamation of the communal land as urban land. MAP 3 under the appendices further shows the morphological changes experienced by the homesteads with the overlay of the formal urban cadastral layout.



Area of homesteads which have been included into the new town boundary. The satellite image is taken in 2010 before the expansion of the town boundary

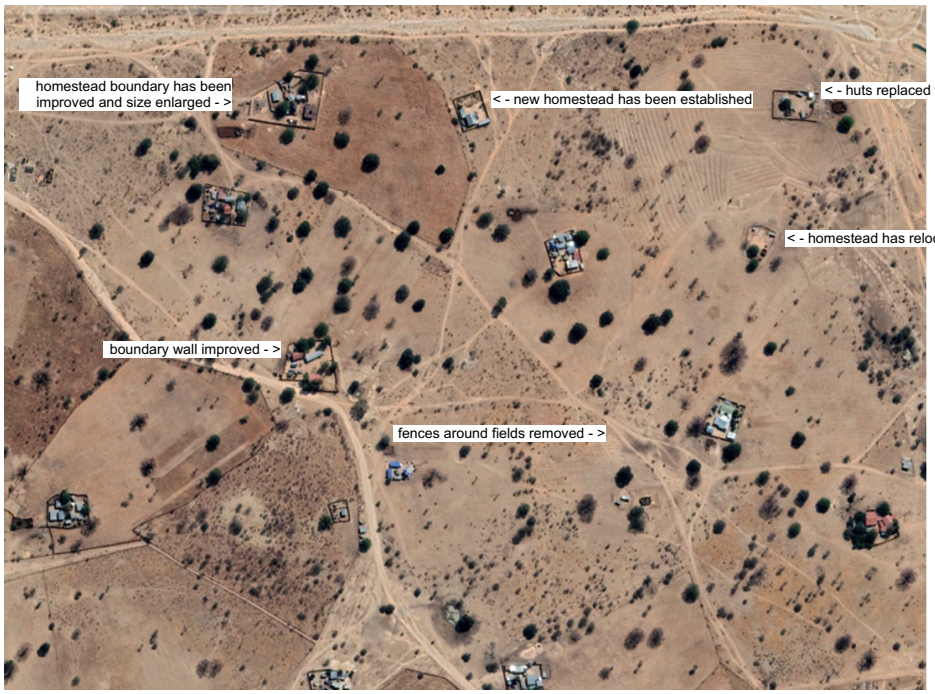

Area of homesteads which have been included into the new town boundary. The satellite image is taken in 2020 after the expansion of the town boundary

Figure 11: Two aerial photographs from 2010 (top), and 2020 (bottom) showing some of the changes which occurred in and around the homesteads in the study area of Onakayale (Source: NSA).

4.4 Relating questions to theory and methods

1. How do residents adapt or reconstruct domesticity and architectural forms when their homesteads encounter the communal–urban nexus?
2. In what ways are spatial characteristics retained, negotiated, or abandoned under new housing and urban land tenure arrangements?

The methods elected to these questions relate to everyday aspects which the researcher explores by immersing himself in the daily lives of the selected homesteads. Buchanan (2020) emphasises the relevance of assemblage thinking and suitable methods for addressing less concrete and straightforward social science questions, such as the daily practices of domesticity and socio-spatial behaviours. Ghoddousi and Page (2020) contend that combining ethnography with assemblage thinking provides a useful approach to investigating everyday life. Additionally, they value assemblage ethnographies, highlighting the importance of autoethnography and related approaches.

Alongside participant observation, narrative interviews with residents revealed important relational layers and details that the researcher might not have initially perceived. While traditional ethnography often relied on subjective translation, more recent approaches have incorporated the perspectives and interpretations of research participants themselves (Berg & Lune, 2012). Pieterse (2014) notes that understanding African "life forms" requires examining everyday practices and imaginaries at the intersection of the multiple crossings that shape urban spatiality. Furthermore, Pieterse (2009) argues that meticulous ethnographic work is essential in challenging technocratic assumptions about what is assumed to exist on the ground versus what actually exists. Bassey and Obwona Aber (2017) support this view, suggesting that organic urban processes are difficult to grasp or control, yet are crucial for theory development. They propose that such an approach offers a new avenue for rewriting narratives of African cities by reconsidering cultural and social dynamics in daily urban life.

3. What does this adaptation of domesticity and architecture reveal about the tensions of planning and compensation systems in Namibia?

The methods elected to this research question extend the inquiry from everyday life aspects, to the institutional field within which that life is being reorganised. While the first two questions focus more directly on the spatial and domestic adaptations themselves, the third question asks what these adaptations disclose about the relationship between lived space and formal systems of land management,

planning, proclamation, and compensation. Assemblage theory is useful here because it allows the research to move analytically between scales, relating material changes in the homestead to wider constellations of actors, regulations, authorities, documents, and territorial processes. In this sense, the homestead is not treated as an isolated domestic unit, but as part of a wider assemblage constituted through relations between residents, Traditional Authorities, Local Authorities, planners, compensation procedures, and urban land-tenure change. The constructivist grounded theory approach further supports this question by allowing these tensions to emerge inductively from the empirical material, rather than treating planning conflict as a pre-given category. Methodologically, this question is addressed through the triangulation of narrative interviews, participant observation, document review, and typomorphological spatial analysis, enabling the researcher to connect residents' accounts of adaptation to the policy and planning systems within which those adaptations occur. In this way, the third question links the lived reworking of domesticity to the broader structural contradictions of the communal–urban nexus.

The constructivist grounded theory approach also distinguished this research from earlier ethnographic and colonial studies of indigenous practices and settlements. Prior research on the production of space, its sociological significance, and socio-spatial practices in southern Africa often revolved around key theoretical debates linking society and space, such as space syntax theory by Hillier and Hanson, structuration theory by Anthony Giddens, and Henri Lefebvre's theory of space (Mills, 1986). Mills (1986) proposed a method for studying southern African domestic architecture that combined Hillier and Hanson's space syntax techniques with Giddens' structuration theory. Much of this methodology was based on Mills' earlier work, but this research aimed to address some of its limitations through a decolonial lens, particularly by critiquing Mills' observational approach, which could have benefited from a stronger narrative inquiry into participants' lives in order to give spatial analysis greater meaning and context. This narrative component also enables the communities involved in the research to have a greater say in the interpretation process. Another limitation of previous studies was the use of spatial terminology that might be unfamiliar or alien to local communities. Chilisa's (2012) focus on language as a decolonial methodological tool motivated this research to employ Oshiwambo in constructing relevant narrative interviews. The significance of language lies in its capacity to preserve local knowledge and to allow participants to express their perspectives in the most authentic manner. This methodological choice was further supported by the researcher's own proficiency in Oshiwambo.

Much of the work undertaken was ethnographic in nature; therefore, it was important to acknowledge the researcher's relationship with the community in which the research was conducted. In particular, it was necessary to recognise that this research was about "us" rather than "them" and that, beyond serving the purpose of understanding an important facet of urbanisation in northern Namibia, it also contributed to the knowledge held within the researcher's own culture and community.

4.5 Customary practice and codes of conduct in research methods

Customary practices and codes of conduct strongly guided the research design and engagements between the researcher and the various stakeholders, particularly the Traditional Authority, Local Authority, and the homesteads. In essence, there was a higher expectation on me as the researcher to observe and adhere to these codes of conduct and practices because the researcher is part of the community being researched. The communities in Owamboland, including those involved in the research, still strongly uphold customary codes of conduct relating to the language used in engagements, an established hierarchy within engagements which governs what type of questions one may be asked, especially when talking to elders, and how engagements with homesteads must be set up and arranged logistically. This presented some challenges; however, the observation of the codes of conduct also ensured trust and translated the ethical and respectful nature of the research to participants and the Traditional Authority. Furthermore, because of the researcher's existing relationship to the research community, any transgression in this regard would have consequences far reaching beyond the research itself. Firstly, it was critical that the researcher obtain the consent of the Traditional Authority as the foremost head of the community and custodian of customary practices including the homesteads, even before the Local Authority.

Secondly, it was also important for the researcher to introduce himself as a member of the community first before presenting himself as a researcher. This process re-establishes communal links and unearths existing histories that the researcher's family may have with that of the research participants. This means that the researcher would often answer questions from participants such as *'who is your father?'* in the introductory engagements as often more important to research participants than details around the university under whose auspices the research is being conducted, or even the research questions themselves. In instances where there may have been conflicts uncovered, the researcher was prepared to forego specific homesteads. In this case however, there were no such instances. Lastly, observations

within the homesteads required appropriate conduct in observing gendered spaces, or spaces which are exclusive to the homestead heads such as bedrooms, and the *ondjuwo* (a sacred room built for weddings and childbirth rituals) unless specifically invited to query and enter. The privacy of many conversations, particularly those between elders in the house was also respected in line with customary codes of conduct.

4.6 Data Collection

The primary data collection methods employed were (1) ethnography through participant observation, (2) spatial analyses using Typomorphological survey, (3) Narrative interviews, and (4) Document analysis. These four techniques were combined for an overall mixed methods approach.

4.6.1 Ethnography through participant observation

Participant observations were documented using text, audio recordings, as well as sketching. Traditional ethnography in anthropology requires the researcher to spend extended time within the communities they are researching to ensure the validity of the results; however, in this case, the researcher spent 2-3 days within each homestead because he is familiar with the everyday life aspects through his own lived experience. The researcher was further immersed in the everyday experiences by integrating into these home spaces as far as customary practices and rules allowed. This was feasible especially due to his understanding of Owambo culture and customs, as well as his ability to communicate fluently in the Owambo language, particularly the Mbalantu subgroup dialect. The spatial and physical characteristics of the homesteads were documented using hand sketches and photographs, synthesised through memo-ing.

Disciplines such as physical geography, the natural sciences, archaeology and architecture have illustrious histories of observational sketching as a field investigation tool. Law (2004), for example, has called for 'messy' methods which tap into the uncertainty and the elusiveness of the social world, advocating 'techniques of deliberate imprecision' and the use of 'quiet methods, slow methods or modest methods' (Law, 2004, p. 15), adjectives that can all easily be applied to sketching.

The researcher was interested in how sketching could be a form of concentrated seeing, which is concerned with the process by which these data are generated. It highlights how observational sketching

necessitates new and deeply embodied ways of learning to see, which also encourages an instinctive approach to seeing the world, and how sketching is an interactive tool between the researcher and the participant to generate data (Sue Heath & Sketchers, 2018). In exploring the use of sketching as a tool for data generation, the researcher involved the research participants by asking them to make sketches themselves, which could be used to generate conversation for narrative interviews. The technique of sketching was particularly useful because participants often struggled to express specific aspects of domesticity and everyday life that the researcher was interested in, as they dismissed these due to a sense of ubiquity and feeling they were seemingly unimportant, as they were normal daily practices one could see past. Through the sketching, participants were able to isolate and more enthusiastically talk about the spaces within the homestead and practices. In essence, the sketching acted as a tool between researcher and the non-researcher when necessary, to elicit a response, however it also provided data, which could thicken the narrative provided by participants. Mäkelä et al. (2014) have argued that sketching is 'both an active and subjective engagement', one which can provide access to ways of thinking that are 'close to the unconscious', and hence is underpinned by an 'intimate knowing' which is difficult to gain by more mechanical means. Observational sketching was a useful tool because people were happier with being sketched as a data collection tool versus photographs being taken, partly due to the fact that sketches are an abstract representation. In addition, the *in-situ* observational sketching technique employed presented an engaging activity, capturing the curiosity of the participants, thus softening the relationship between the researcher and non-researcher.

The observations culminate in a detailed description of the homesteads, with accounts supported by thick descriptions presented in the style of vignettes. Using a flat ontology inspired by assemblage, each homestead is described in terms of its material and spatial state, with domesticity and practices analysed accordingly. This approach employs the extended case method, initially popularised by ethnographic researchers in anthropology, such as Gluckman (1940) in his analysis of the social situation in modern Zululand, and more recently by Luhl (2020), Martin and Hohn (2020). According to Martin and Hohn (2020), vignettes can be used to depict social change, and the analysis that follows the initial straightforward description moves away from functionalist, decontextualised abstractions within social research. Where relevant, the analysis of vignettes from observations of a particular homestead is supported by observations from other homesteads. To ensure the privacy of participants in the writing of vignettes, alias names have been employed.

4.6.2 Narrative Interviews

Narrative interviews have emerged as a critical qualitative research method, particularly in fields concerned with capturing lived experiences, socio-spatial practices, and the interconnections between individuals and their environments. Unlike structured or semi-structured interviews, which are guided by predefined questions, narrative interviews allow participants to construct and recount their experiences in their own words, following a self-generating schema (Lawlor, 2000). This research benefits from this approach by centring participants' lived experiences and interpretations of spatial transformations. Narrative interviews directly address the researcher's inquiry by eliciting rich, detailed accounts from participants who have lived through these encounters at the nexus. This method allowed informants to narrate their spatial experiences, discuss their adaptations, and reflect on their changing relationships with space, governance structures, and community networks. This method draws upon assemblage theory to understand the dynamic interactions between indigenous spatial practices and imposed urban planning frameworks. Assemblage theory emphasises relationality, fluidity, and the co-constitution of space by various actors, making narrative interviews particularly suitable for capturing these complexities. As participants recount their lived experiences, their narratives reveal assemblages of spatial practices, legal frameworks, economic adaptations, and socio-political negotiations, thus offering empirical insights that align with the study's theoretical commitments.

4.6.3 Document Analysis

Documents involved in the urban development and planning practices were also collected, e.g., drawings, frameworks, policy documents, Local Authority minutes, public engagement notices, and moratorium notices. Much of the document analysis was introduced after the initial emergence of themes from the coding process using Thematic Content Analysis, which would require an engagement with these documents.

4.6.4 Typomorphological Survey

To understand the existing spatial logic and transformation of Owambo homesteads over time, this study employs typomorphological analysis as the primary spatial method. Typomorphology, which combines typological classification with morphological mapping, offers a structured approach to examining the relationship between form, function, and settlement context (Jiao et al., 2023; Saylan & Gürer, 2024). When applied to homesteads, this method helps identify recurring spatial patterns such as compound

layouts, enclosure styles, and dwelling types, while also revealing local adaptations, historical changes, and social influences on spatial development. As demonstrated in research on traditional urban districts and historic landscapes (e.g., Jiao et al., 2023; Springer, 2024), typomorphology is particularly effective where architectural form is closely linked to cultural practices. In this study, a comparative analysis of historical and modern homesteads highlights how spatial arrangements such as the placement of cattle kraals, cooking areas, and gendered spaces have evolved over time due to migration, urban expansion, and changing household structures. This approach enables a detailed understanding of both continuity and change in space, illustrating how cultural identities are represented, preserved, or transformed within the built environment (Stojanovski, 2019).

The study uses spatial depth and proximity relationships to analyse the changes experienced in the homesteads. These two key aspects are selected due to the way the Owambo homestead works. The typomorphological survey of the individual homesteads focused on the typological process of transformation in terms of spatial depth and proximity relationships, which in essence establish the spatial character of the homestead. In section 5.2, the important spaces within the homestead are mapped out, and their relationships to the domesticity of the homestead are outlined. Section 5.2 also details the gradual creation sequence of the homestead and nuances related to the Mbalantu subgroup. The spatial characteristics are isolated to the proximity relationships between vital elements that persist in the typology, such as the *oshoto*, *epata*, individual bedrooms, and the mediating or threshold elements. The typomorphological survey provides insight into the spatial changes of the individual homestead at the nexus, across their material changes which are visible in photographs taken and also from the change of spatial forms visible in the aerial photographs sourced. The survey and analysis account for two metrics: (1) *Spatial Depth*, which is the number of sequenced privacy layers in the homestead, ranging from the most public to the most private and sensitive spaces, and (2) *proximity relationships*, which define the strength of the mediating thresholds between the elements that comprise these layers and spaces.

Spatial depth is analysed as a sequence diagram as shown in Figure 12 showing which spaces lead to others as people move through the homestead. In contrast, proximity relationships are defined as either strong or weak based on whether the elements facilitate both physical and visual access or restrict them. Reading these layers together allows the researcher to analyse the significant spatial changes that have occurred in the homestead and triangulate this with other data from the methods chapter.

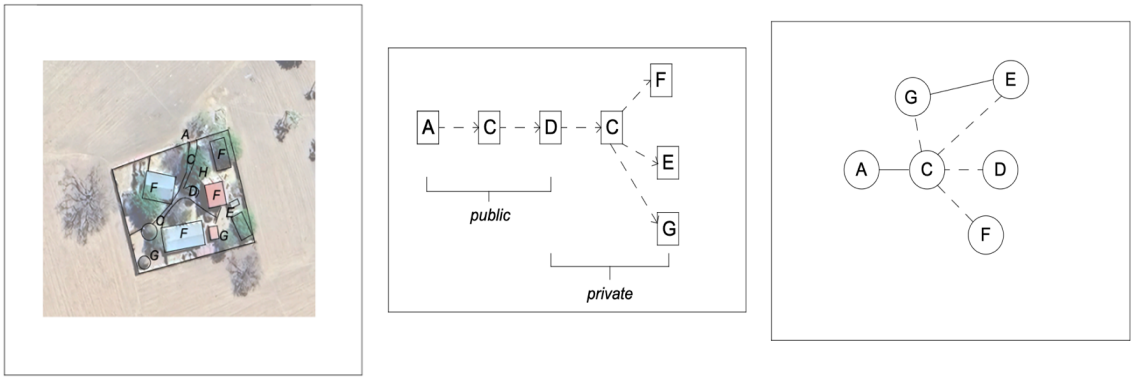

Figure 12: The coding of the typomorphological survey showing the spatial depth diagram at the centre, and the proximity relationships on the right.

4.7 Data Analysis

Relational aspects on domesticity and socio-spatial practices were extracted from the observations and narrative interviews through Thematic Content Analysis (TCA). Vaismoradi et al. (2016) describe a 'theme' as the subjective meaning and cultural-contextual message of the data collected. Evers (2016) writes that these techniques required the researcher to be creative and identify emerging themes from the interviews, going beyond existing knowledge.

The results were then compiled, and the emerging aspects from the meaning units were interpreted by the researcher. The emerging themes were subsequently further explored through follow-up observations within the homesteads, as well as document analysis and desk studies. In order to ensure the credibility of the analysis process, the researcher communicated the interpreted findings in their preliminary form through conversation with residents in order to achieve consensus as suggested by Bengtsson (2016). At the same time, this also provided a useful tool for the researcher to stimulate participant conversation and interest in the focus of the research during the narrative interviews. Further details on the analysis and results are included in the Findings Chapter.

The insights from the typomorphological survey and visual analysis in the forms of sketches, photographs of the physical characteristics of the homesteads in the cases were triangulated with the findings from the narrative interview notes to support and verify the relational human and material aspects in the domesticity and socio-spatial aspects, and formed the basis of the subsequent findings and discussion chapters.

4.8 Ethical Considerations

Research ethics are described by Resnik (2018) as "the critical reflection and application of internationally accepted criteria, norms and values for research conduct, involving human subjects, animals and the environment." The research followed guidelines recommended for social research at the University of Cape Town (UCT), as published in the Faculty of Humanities Guide to Research Ethics for Research on Human Subjects (UCT, 2006), the Namibia University of Science and Technology (NUST) Research Ethics Code under its Research Policy, and those supported by the Social Research Association (SRA) (Rich, 1984). Ethnographic research carries significant ethical considerations. The ones identified as specific to this research were:

(1) Undue intrusion: Although I requested access to private home spaces for research purposes, it was essential that the researcher did not view achieving the research objectives as more important than the comfort of the residents. (2) Respect for customs and privacy: This aspect is particularly significant given that the Owambo homestead is governed by strict local customs such as greetings, access to certain spaces, and the hierarchy of social interactions. The research activity was always conducted with respect and consideration for these and other customs.

(3) Participant consent: Participant observation required the researcher to capture information almost spontaneously, and the researcher ensured that the participants were constantly made aware that what they said or did was being recorded for research purposes.

(4) Archiving and presentation of research information: once the research material had been collected, the researcher kept the audio recordings, photographs, sketches, and transcriptions on secure media to maintain the privacy of the participants. The researcher stored all information on a password-protected personal computer and did not share it without the participants' consent.

(5) Use of Alias Pseudonyms: This research employed pseudonyms for all individuals involved. The use of alias names is a well-established practice in qualitative research, particularly when revealing identities

could expose participants to social, cultural, or political vulnerabilities (Babbie, 2016; Creswell & Poth, 2018).

Because this study is based on narrative interviews and ethnographic engagement within a small community to which the researcher also belongs, anonymity must be understood as a matter of ethical safeguarding rather than absolute de-identification. While alias names were used throughout the thesis, the contextual and socio-spatial specificity necessary to analyse domesticity, land, and spatial practice at the communal–urban nexus means that full anonymisation was neither entirely possible nor always methodologically desirable. The research therefore adopted a relational and process-based approach to consent and confidentiality. Participants exercised agency over what they disclosed through the narrative interview format, and only material that they were comfortable sharing was included in the thesis. At the same time, access to the field was mediated through customary protocols, including consent from the Traditional Authority and culturally embedded forms of introduction and vetting, which helped establish trust and ethical accountability within the community. In this sense, the study sought to balance contextual integrity and analytical depth with proportionate ethical safeguards, recognising that excessive removal of identifying spatial and relational detail would dilute the interpretive value of the findings.

To further protect participants, certain identifying particulars in Chapter 5, including occupations, workplaces, villages of origin, and minor biographical events, have been generalised or omitted. These alterations were selected so as not to affect the spatial, social, or analytical substance of the accounts (Kaiser, 2009; Weiss, 1994). Given the visual and spatial nature of the study, anonymity nonetheless remains partial rather than absolute, particularly for readers familiar with the study area (Tolich, 2004); it is therefore complemented by the relational and process-based consent practices described above (Ellis, 2007).

4.9 Limitations

The limitations to the research were mainly logistical. Due to the limited funding available for the research, resources had to be proportioned to try to achieve the full breadth and scope appropriate for research at the doctoral level. The initial research scope of interest included two additional nexus areas namely the Okalongo-Mbadja communal area nexus, and the Oshakati-Uukwambi communal area nexus. After the exploratory field trips to these nexus areas and after consultation with the stakeholders, such as the Local Authority and Traditional Authority whose consultation was needed to select homesteads to be part of

the research, it proved difficult to cover all these areas for one researcher without enough financial resources to cover all three areas. The researcher therefore elected to rather study the Ombalantu-Outapi nexus area.

The research was started in 2020, when the full COVID-19 nationwide emergency lockdown measures were activated. The researcher had initially intended to spend many days living in the homesteads to observe the everyday life aspects, to which many research participants had initially agreed. However, the anxiety around personal interactions involved with extended stays at homesteads later presented a concern to the participants and their families especially because there were many senior persons involved as research participants. This means that the research on the ground had to be more brief in some instances, relying more on the interviews conducted with the people in the homestead than initially intended.

The research approach of grounded theory also presents some inherent limitations. When researchers attempt to identify and analyse patterns that may be difficult to observe using a traditional scientific approach, the main disadvantage is that the results are not generalisable.

Thematically, the research interest was mainly the domesticity and socio-spatial practices at the nexus of urban and communal land. However, the researcher needed to be flexible to incorporate the ideas which the research participants felt were important and relational to these themes. This resulted in the compensation policy becoming an important aspect of the research. Other themes therefore may not have been explored within the same depth such as the architectural characteristics of the homesteads.
The flexibility to incorporate thematic areas most important to the research participants had a direct consequence on the recommendations, which were focused on the thematic areas of most importance to the research participants, which were the urban development process and its instruments, such as the policy for compensation for communal land. There are certainly other possible outcomes from research of this nature and thematic focus which could generate additional recommendations or models which focus more on the material aspects of the realities at the nexus, such as appropriate architectural typologies and planning bylaws, which are areas the research slowly shifted away from as the research project developed.

Lastly, the time period in the year when the observations in the homestead were done also affects the research results. For example, during the school semester months, the children were away at their boarding schools.

4.10 Summary

The methodology of this research is grounded in grounded theory and assemblage theory, chosen to investigate the domesticity and socio-spatial practices at the nexus of urban and communal land in northern Namibia. Grounded theory emphasises the primacy of data in generating insights, while assemblage theory allows for the exploration of relational, fluid, and non-essentialist urban phenomena, focusing on human and material actors alike. These frameworks help to avoid binary approaches to understanding the social and spatial dynamics of urbanisation in this region. The research design evolved through exploratory fieldwork in Onakayale (Outapi), where the researcher's initial quantitative approach shifted towards qualitative methods based on the lived experiences and concerns of the community. This shift was critical for addressing issues that the community identified as important, such as compensation for communal land being integrated into urban areas. Consequently, a mixed method case study approach was employed, with a focus on a single site (Outapi-Ombalantu nexus) to deeply understand the complexities of the socio-spatial aspects, rather than diluting the research across multiple settings. Onakayale was chosen as the case study site due to its position at the nexus of communal and urban land. The researcher's background in the community facilitated access to critical stakeholders, such as the Traditional Authority and homesteads. Additionally, the exploratory field trip helped refine the research questions and methodology to better capture the urban development processes at play. The primary methods included spatial analysis of the homesteads at the nexus, ethnography through participant observation**,** narrative interviews**,** and document analysis. Ethnographic fieldwork was facilitated by the researcher's familiarity with the Owambo language and culture. Observations were documented through audio recordings, notes, sketches, and photographs. Narrative interviews within the homestead, traditional authorities, and urban development officials provided critical insights into domesticity and socio-spatial practices.

Thematic Content Analysis through using manual coding was employed to identify emerging themes from the data. The analysis followed a structured process: decontextualisation, recontextualisation, categorisation, and compilation, with efforts to verify the findings by engaging with participants for

consensus, as participants were continuously engaged throughout the research period. The spatial and visual data (sketches and photographs) were triangulated with interview data to ensure comprehensive analysis. The research followed ethical guidelines to respect participants' privacy, customs, and consent, especially given the local values of the Owambo community. The researcher ensured that participants were aware of the recording and documentation processes, and all collected data were securely stored to maintain confidentiality. This methodology, grounded in community-sensitive approaches and supported by robust theoretical frameworks, aims to provide a deep, relational understanding of the socio-spatial dynamics at the urban-communal nexus in northern Namibia.

Chapter 5: Findings at the Ombalantu-Outapi nexus

5.1 Introduction to findings

The methodology chapter outlined the motivation behind using the grounded theory case study approach coupled with the concept of assemblage theory. The preceding chapter (Chapter 3: intersection of land, housing, and socio-spatial practices) explored the historical and policy context shaping the everyday life experience at the nexus and unpacked the pertinent matters emergent from the research to draw the context of the intersection of land, housing and socio-spatial practices in Namibia and to inform the reader on *how* and *why* we have the *status quo* of these matters in northern Namibia today. The findings chapter is arranged in the data collection and analysis sequence using the grounded theory approach. This begins with a macro-scale typomorphological survey of the homesteads at the nexus of urban and communal land at the Outapi-Ombalantu nexus, which is supported by findings from narrative interviews to describe how the homestead on communal land is established in order to analyse the important spatial patterns and relationships in the homestead. The section thereafter presents the findings and analysis of the ethnographic participant observation method, recounting those findings which provide a situated understanding of the domesticity of the homesteads on communal land and their contribution to the overall answering of the research questions in the introduction chapter. The subsequent section provides an analysis of the narrative interview data for the interviews conducted to triangulate the observation findings further. It is concluded with a summary of all the findings, which are carried through to the discussion chapter.

5.2 How the homestead on communal land is established

In most cases, the homestead is usually established by a man and a woman who have got married.
The man and his family usually plan to establish the homestead before the wedding ceremony. They will include important aspects such as the specific location, and the other people who will live in the homestead. This is considered very important as the couple will often not be able to work in the field on their own and thus will always live with other family members or extended family members. It is common for children in one homestead to relocate and move to another established homestead to make the homestead sustainable. The planning will also involve aspects such as when the homestead construction will start.

After the wedding ceremony, the newly wedded couple, with the assistance of elders from both families, will arrange the construction and eventual moving of the people to the homestead. The construction process begins when elders clarify the exact new position of the homestead. This is determined by many spatial factors, such as available space that had already been demarcated for a future homestead on the land surrounding another homestead or within another area of communal land in consultation with the local headman. The elders may also specify aspects such as the orientation of the entrance or the exact location of the *oshoto* and *epata* spaces. This would often be translated spatially using markings in the ground specifying size, orientation, openings, and other important architectural elements. For this reason, it is common to find that homesteads belonging to relatives who have established them over the years will have shared spatial characteristics because they had consulted the same elders about the construction of their homesteads. In other instances, there may not necessarily be an elder involved in the spatial planning process, and the head of the homestead, usually the man, will make these decisions.

The initial space constructed generally depends on the logistics of the construction team, which includes the head of the homestead and other helpers. If the homestead of the new homestead head is nearby, they often build a shade structure for resting during short breaks and walk back to their homestead after a full day of work. If the distance is greater and cannot be covered by a short walk for meals and sleep, the first structure built will typically be a bedroom (Ongulu) to provide a safe, enclosed space for sleeping. The timing of constructing the rest of the homestead also depends on this process. It often takes time, especially if a homestead is established by a newly wedded couple, and also depends on the relationship with the family hosting the couple while the homestead is being built. Importantly, a structure whether a bedroom, a covered resting area, or a kitchen (epata) must be built, as this signifies ownership of the land and indicates it is actively being developed. Besides the customary tenure system, recorded both orally and on paper through tax collection booklets as seen in Figure 13 below, the presence of physically built structures on the land is the strongest claim to that land.

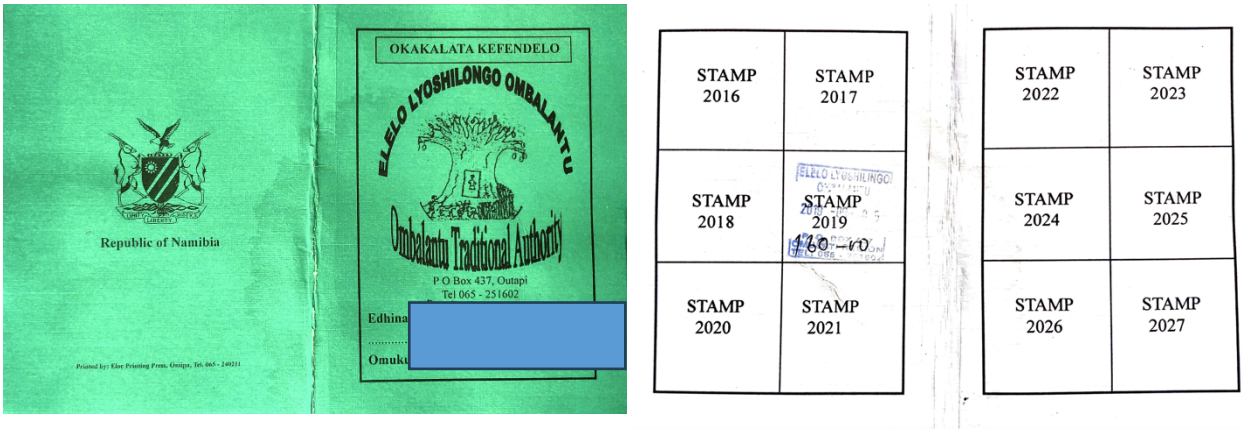

Figure 13: Booklet with the record of yearly payment of newly established homestead in the Ombalantu communal land area to the Ombalantu Traditional Authority. The stamp dated 2019 shows a payment of N$160.00 paid to the TA

Annual payments made to the Traditional Authority for establishing and maintaining a homestead are not the only contributions to the TAs. Each year, every homestead is also required to contribute a 5-litre bucket of millet. These contributions are accumulated in a millet bank, which is given to poorer homesteads that may be unable to produce or harvest anything from their maize fields. There are no strict punishments for homesteads that fail to make the required payments; however, all homesteads are encouraged to contribute, even in smaller amounts. (Participant A, personal communication, May 1, 2021).

After the initial structures are built to meet the most immediate needs of the homestead, a palisade, often made from wooden sticks, is constructed around the entire area designated for the homestead to protect and enclose it. This is done simultaneously while clearing the space around the homestead to prepare the land for ploughing for the first harvest. The rest of the homestead will be developed gradually as needed and resources, material, labour, and time become available. The spatial depth of the homestead increases, reinforcing appropriate characteristics related to privacy, hierarchy, and space use, depending on the relationships between residents and visitors. For example, once other members move into the homestead, the epata space will be expanded as more members join, with food storage and preparation areas also growing. The presence of women and children will further drive the expansion including additional rooms or storage for food, separate indoor and outdoor food preparation zones, shaded areas for overseeing food prep, and social spaces around the epata such as flat logs for sitting or semi-covered areas with chairs as part of the epata.

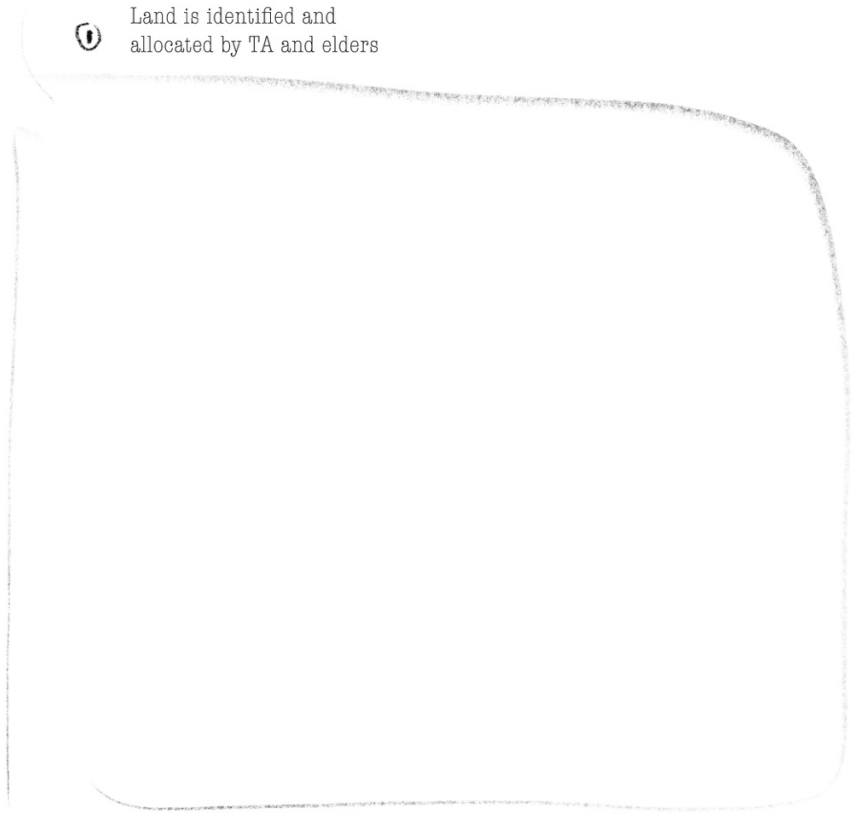

Figure 14: Conceptual sketch showing the identification and marking of the area allocated to a new homestead

1. A married couple is given land rights to settle and build a home. If space permits, this will be in close proximity to the homestead of the man's family. The total land area is identified and marked as shown conceptually in Figure 14.

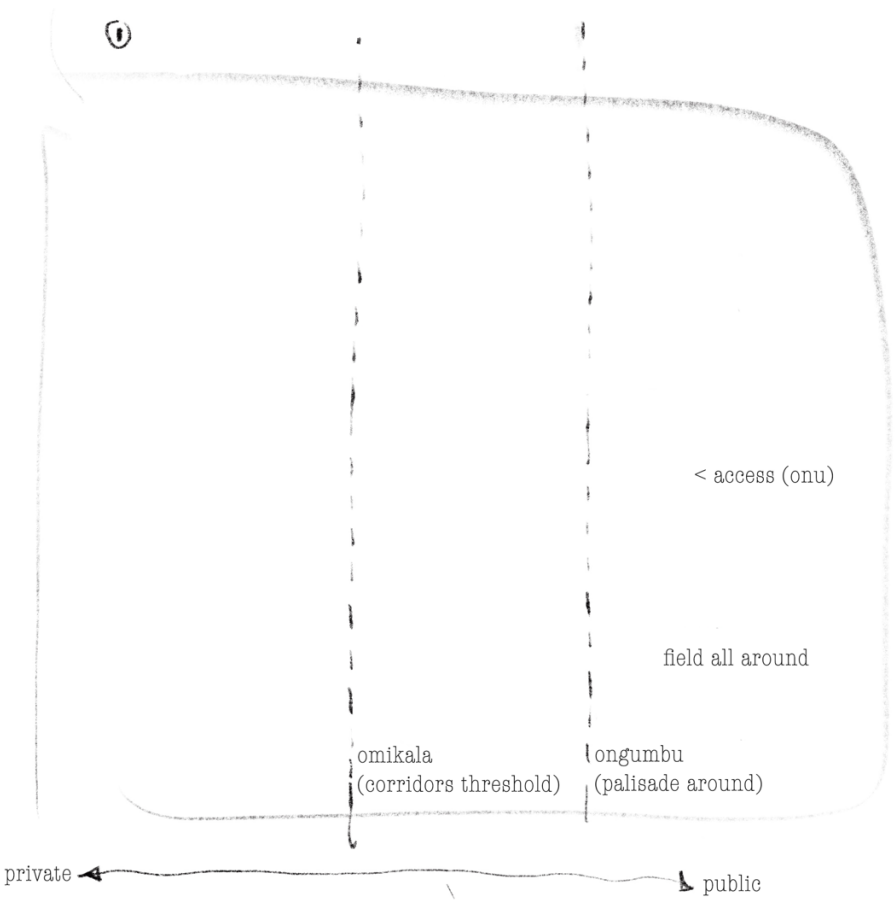

Figure 15: Conceptual sketch showing the overlaying spatial logic of the homestead from public to private considering the entrance, orientation of entrance, and thresholds.

2. After the area for the homestead is selected and demarcated, the entrance is established, and the extent of the homestead in terms of size is finalised and enclosed, sometimes with temporary material. The spatial logic of the homestead is also determined at this point as shown conceptually in Figure 15. This includes the spatial direction of the homestead's depth from public to private or from least sensitive to more sensitive.

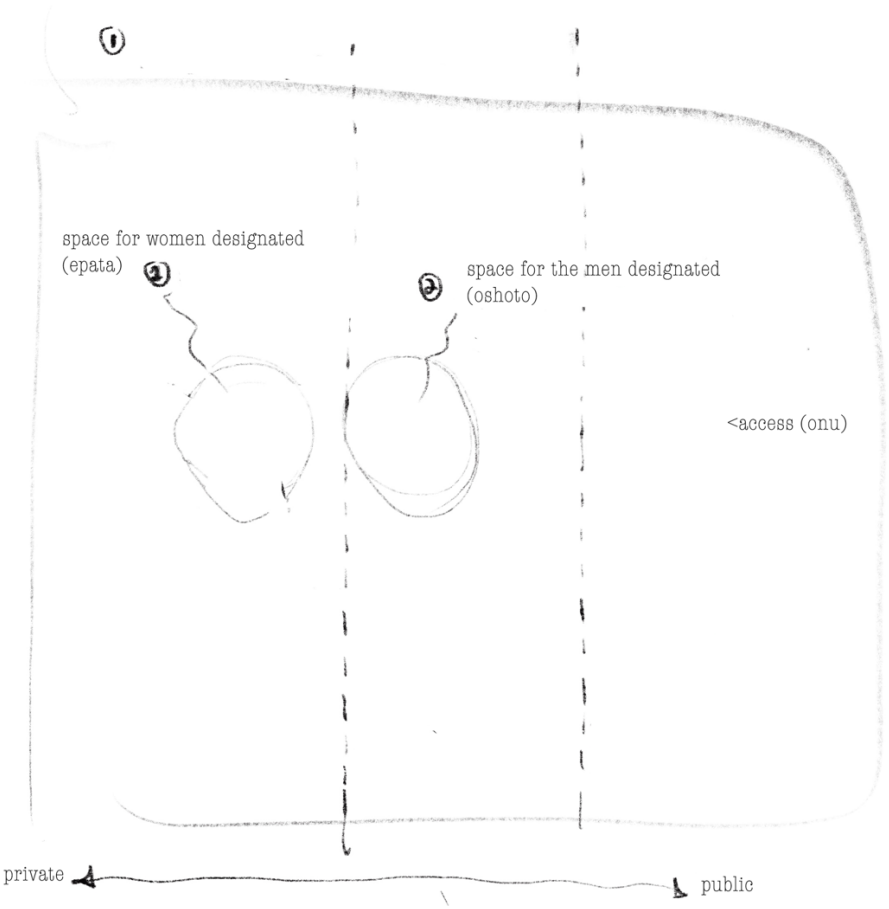

Figure 16: Conceptual sketch showing the demarcation of gendered spaces in the homestead particularly the epata space, and the oshoto space.

3. The gendered spheres are established, including the epata space for the woman and the man's oshoto/Etala. At the beginning, only the essential elementary spaces are created, and it is more of a zoning of spaces that will increase (as shown in Figure 16) in complexity as the members of the homestead increase.

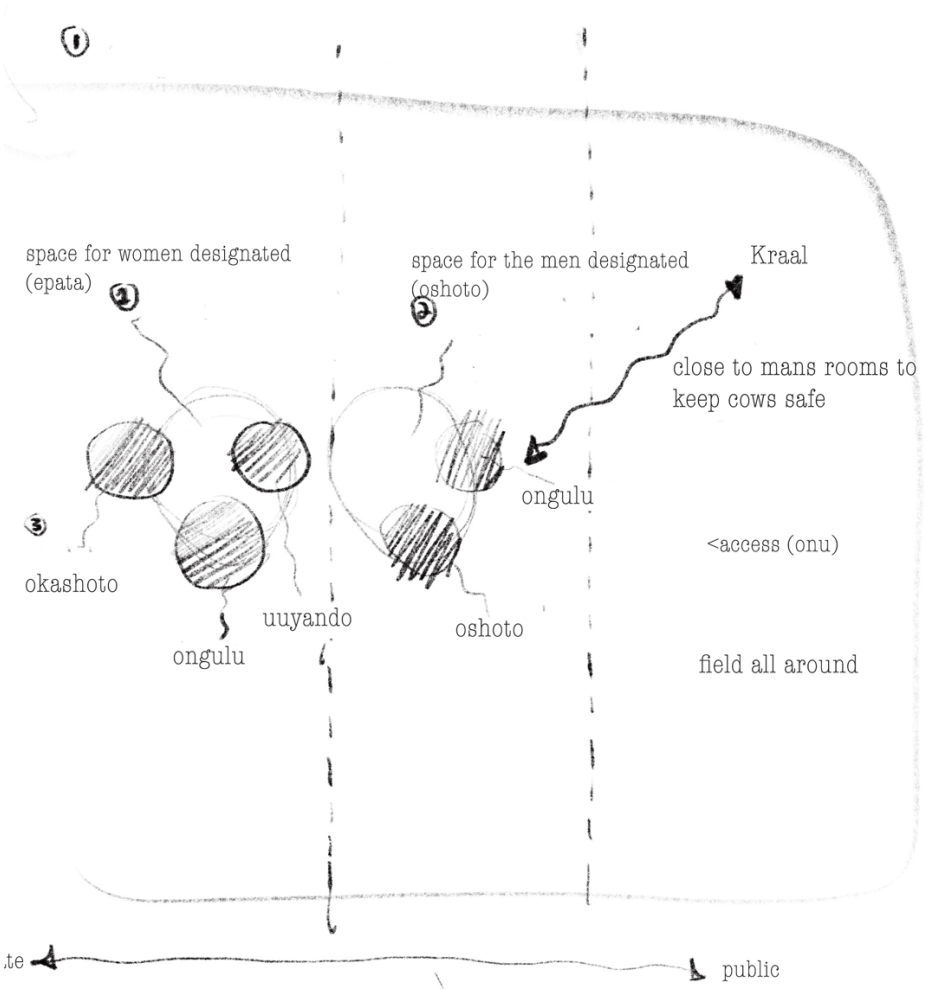

Figure 17: Conceptual sketch showing the emergence of rooms as spatial needs emerge in the homestead.

4. The epata space for the woman increases in complexity with the addition of receiving spaces for her guests to the epata space (okashotona), storage rooms for condiments, food, beverages, cooking spaces and granaries (uuyando). Similarly, additions are made to the men's area with utility rooms as the spatial requirements emerge. This development is conceptually shown in Figure 17.

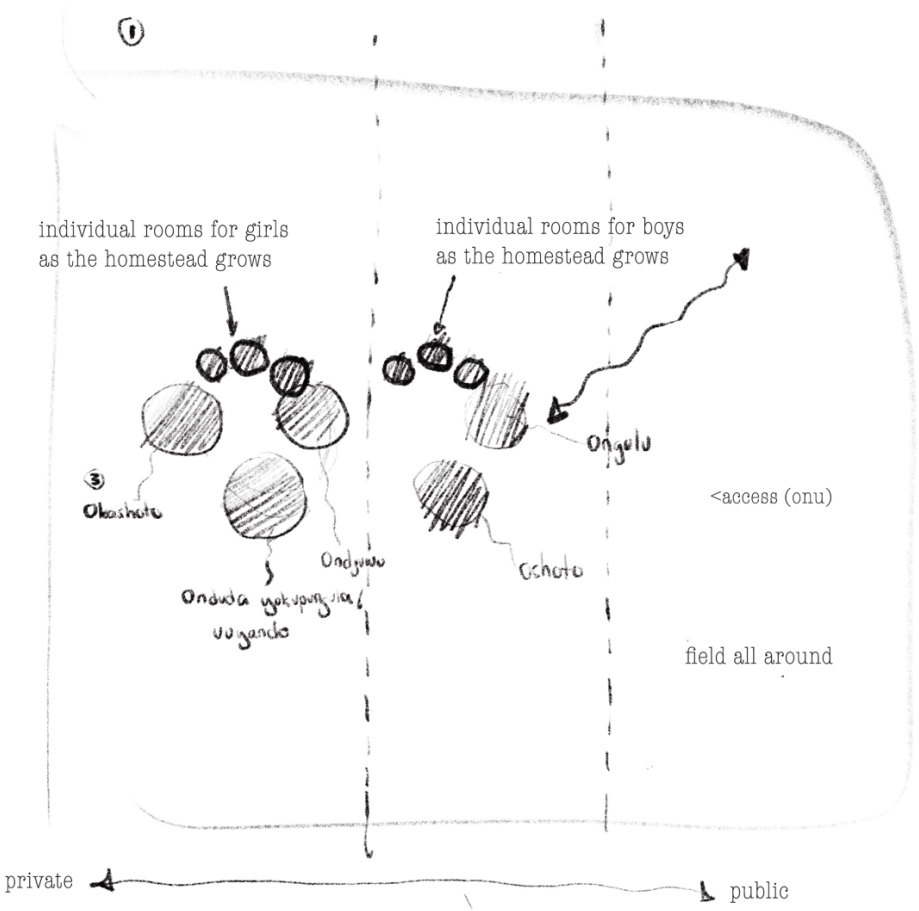

Figure 18: Conceptual sketch showing the addition of individual sleeping rooms to cater to the growing number of people in the homestead. These rooms follow the spatial logic of the homestead with regards to privacy and gendering.

4. Later, when their daughters and other young girls in the homestead mature, individual rooms will be built for them around the zone of the epata space, and for the young boys, individual rooms will be built for them around the oshoto space. This creates the spatial depth of the homestead, connected and mediated by the corridors, shielding sensitive spaces such as epata from the entrance and boys' rooms as shown in Figure 18.

Other spatial elements may also be introduced, like thresholds between the epata and other parts of the homestead, including corridors lined with palisades to clearly distinguish public, private, and semi-private zones, as well as to regulate visitors during short visits to the oshoto space and longer engagements such as customary ceremonies like weddings. Auxiliary storage spaces and granaries are also built in preparation for the first harvest and field yields. Until the first harvest arrives, the homestead will share in the yields of other homesteads.

The spatial characteristics of the homestead are shaped by the functioning of the wider community within the communal area and the larger Mbalantu subgroup. A single homestead not only houses the immediate family but also provides spaces for 'guests' or others not part of the household. Homesteads frequently accommodate additional people who stay for short periods for schooling, healthcare access, or work due to the household's proximity to schools and clinics, and because they often employ household members sharing the housing. Based on customary practices and the researcher's observations of homesteads on communal land as well as those re-established onto communal land, discussed further in later sections, residents (Aanegumbo) fall into categories: (1) Homestead Heads (Aakuluntu), (2) their children (Aavalwa), (3) other extended family and friends (Aatekulwa), and (4) guests (Aayenda) as shown in Figure 19 below. These categories also reflect a hierarchy within the homestead that guides social interactions and influences the spatial arrangement. Guests are integrated into the home's social and spatial fabric as they can be comfortably accommodated, and privacy can be maintained through various spatial elements such as smaller courtyards or open spaces, palisades, and corridors, which create spatial depth. Although many homesteads today feature modern materials and designs, it is notable that some 'sacred' spaces are preserved in their original form and significance. One such space is ondjuwo, often built with a small entrance that nearly requires a crouch to enter, with minimal openings, and sometimes constructed using mud blocks and thatched roofs, closely resembling traditional construction. A homestead cannot host a wedding without an 'ondjuwo', and it is also essential for childbirth rituals and many other ceremonies. It is generally considered inappropriate to use a regular room within a modern building as the ondjuwo, as it is meant to be a secluded and private space, traditionally with a 'round' structure.

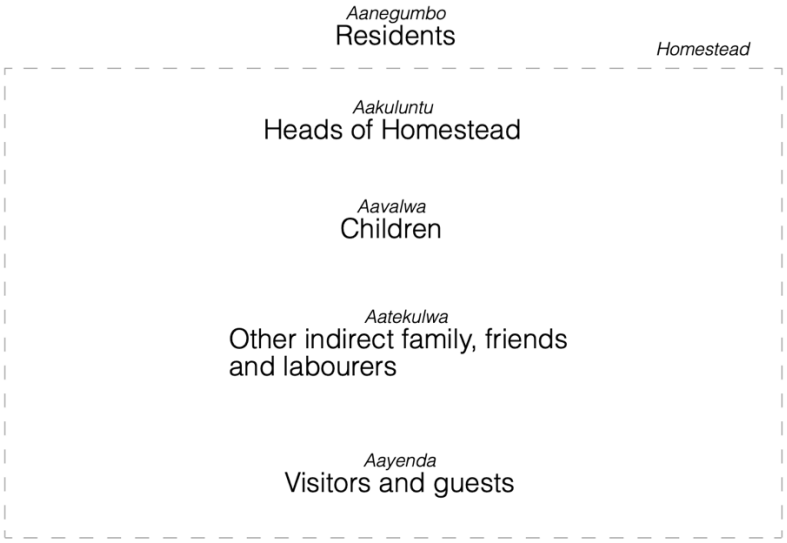

Figure 19: Image outlining the people in the homestead. Source: Author

5.3 Spaces in the homestead and their meanings

The argument developed thus far has shown that the communal–urban nexus is shaped not only by planning systems, land tenure regimes, and compensation mechanisms, but also by the enduring internal logic of domestic space. Section 5.3 therefore shifts from the wider structural conditions of urbanisation to the spatial and social composition of the Owambo homestead itself. In doing so, it demonstrates that the homestead is constituted through a set of interrelated spatial elements whose arrangement reflects deeply embedded practices of gender, kinship, ritual, production, hospitality, and authority. Describing these elements, and the order in which they are established, is essential to understanding how homestead domesticity is reproduced and transformed under conditions of urban encroachment and socio-spatial change.

The entrance of the homestead (*Eelo or Onu*) is the first point of interaction with the homestead, an important space which signifies the transition between inside and outside of the homestead. It is often marked by the presence of a tree to provide shade, as many visitors to the homestead will often use this space to deliver their message, greetings, or exchange casual pleasantries with the residents in the homestead. The entrance of the homestead extends the daily living and domesticity of the homestead into the public space.

When a guest arrives at the entrance and wishes to enter the homestead, they will call out "*meumbo?*", to which the resident will respond with "*Omomu*". This oral tradition is a customary and respectful way for a guest to announce their arrival to avoid disturbing those in the homestead, while requesting access at the discretion of those in the homestead. It is extremely important in Owambo tradition, and the entrance is an important space around which this practice occurs. The corridor or (*omikala*) usually connects the entrance to the reception area or (*oshoto*) in a controlled manner, preventing unauthorised access to other private spaces both physically and visually. The corridors link various spatial elements within the homestead and create thresholds between public, semi-public, and private elements.
The guest further expresses who they wish to see from the household and may further express the purpose of their visit if it is appropriate to declare (usually to a child or the individual minding the household at the time). Due to the close-knit relationship between the homestead and the community, the entrance is usually unlocked and usually closed to prevent goats and other small animals from wandering into the homestead and causing havoc.

Once they have walked along the corridor space, they arrive at the *oshoto*, which is an outside reception and meeting space within the homestead, usually arranged in a circular arrangement with logs laid flat for people to sit and converse. It is often spatially positioned centrally in the homestead, with a fireplace at the centre to light the space up in the evenings. The *oshoto* is an important space within the domesticity of the homestead.

The oshoto space in the homestead serves as a reception area for guests and is considered the most important space for men within the homestead, as they occupy this area in the early evenings while waiting for the food to be prepared. It is also frequently used as the main gathering place for the entire family when discussing or deliberating on domestic issues. Additionally, oshoto functions as an extension of the communal space, connecting the public sphere to the private home for guests, and facilitating meetings, teaching, conflict resolution, and recreation during traditional events such as weddings. The house's spatial layout is intentionally designed to guide visitors using corridors built with sticks, open areas enclosed with wooden sticks clad with corrugated metal sheets, concrete brick walls, and other materials, to this area before they access other private parts of the homestead. If a guest arrives when no one is available at the entrance, the corridors typically lead their movement towards the oshoto, where they can sit and wait to be received. Many homesteads feature two oshoto spaces: one located closer to the entrance (onu), intended for guests, and another, more centrally located, for the residents.

The oshoto space carries gendered dynamics. It is the space used by the male elders and young boys in the evening to sit around a fire and debrief on the events of the day, as well as storytelling. Later in the evening once the elder men in the homestead have gone to sleep, it often turns into a play area for both the male and female children in the homestead. Generally, when the visitor to the homestead is male, he will stop and be received at the oshoto. This is in contrast to when the visitor or guest to the homestead is a woman. In this case she will be escorted to the epata (food preparation/kitchen space), where she will present her gifts.[6]

The epata space is a food preparation area comprising both enclosed and semi-enclosed areas.
It is the main food preparation area in the homestead, and it is managed by the woman head of the homestead. It is her space and one of the first spaces demarcated and built during the construction of a newly established homestead. During the rainy season, for example, food may be prepared in a semi-enclosed hut with sufficient ventilation, whereas when larger meals are being prepared, and weather permits, the cooking may occur outside the same hut in an uncovered area. The fully enclosed spaces are usually for food and beverage storage and are usually strongly linked spatially to granaries (ouyando), which store the grain yield reserve of the homestead. The epata is also a social space; separate spaces will often be hosted for people to sit and socialise around cooking and other food preparation. During weddings and other customary ceremonies, the epata is the space where women and young girls congregate, socialise, and manage the food preparation aspects of the ceremony. The sense of community is evident in many aspects, from how space is arranged to more subtle rituals and practices still customary today. Surplus food is always kept after dinner in case there is a guest who arrives at night. *Oshikundu* [7]is kept during the day as a practice, even if no one at home drinks it because a guest may come in during the day.

Other than the epata, one of the more sacred spaces in the homestead is the *ondjuwo.* This is the bedroom belonging to the woman head of the homestead. Today, however, these spaces are built symbolically to

[6] When women visit a homestead, it is customary to carry gifts in the form of condiments and food items carried in locally woven baskets and clay pots.

[7] Oshikundu is a beverage made from fermented millet (mahangu flour), brans and malted sorghum flour mixed with lukewarm water.

mirror the past but are not used for sleeping. They are often constructed with modern materials, as shown in Figure 20 below, and are used solely for ceremonies. The *ondjuwo* is typically built with a small entrance requiring almost a crouch to enter, with minimal openings, often still built from mud blocks and thatched roofs (or closely mimicked). Some are built with a small reception area at the front called *okashotona*, which is frequented by women and is a social space around which childbirth rituals and childcare happen. A homestead cannot host a wedding without an 'ondjuwo', as some of the bride preparation rituals happen in this space. It is also important during the rituals of childbirth and many other ceremonies.



Figure 20: A recently built ondjuwo space with modern construction material.

Ongulu (eengulu in plural) are the individual buildings which usually house sleeping rooms, indoor living rooms, and indoor storage rooms. These are usually built with cement blocks and corrugated metal sheet roofs. More recently, these have begun to resemble detached single residential buildings like those you would find in urban areas. They are usually cellular in their spatial setup, with rooms linked and accessed by double loaded corridors. In some cases, they can house multiple functions such as bedrooms, living rooms, store rooms, a bathroom and an indoor kitchen.

The *oshini* is an enclosed hut or modern cement block, which is used to pound sorghum, a traditional, often communal method of processing grain, largely in Africa, using a wooden mortar and pestle to remove the hull and pound it into flour. Young girls in the homestead are usually involved in this domestic labour, although it is common for young boys and other elders across genders to help when more hands are needed. It is also common for the young girls in a community to come together and do the processing for one homestead together to complete the work sooner while also socialising together.

Etala (shaded veranda) is an important space in the daily life of the homestead as this is where people spend time in the day doing simple tasks (children doing homework, women weaving etc.) while passing the day. It is usually a roof structure of either thatch or metal sheet roof supported with poles. Homesteads usually have multiple veranda spaces, and it is common to refurbish them or add more when in preparation for a customary ceremony like a wedding, as this is where the guests to the homestead will be entertained. During the day when it is hot, the *etala* can play the role of the *oshoto* space.

Granaries *(uuyando)* store grain harvested from the previous seasons, sometimes up to 5 years. They are round enclosed structures elevated from the ground with wooden legs and roofed by round thatch roofs, which can be removed easily to access the granary. They are built using special hand techniques and weaving patterns, and these techniques are passed down through generations, although today, there are fewer people with the situated knowledge to build them. In recent years, they have been replaced by industrially manufactured granaries made with composite materials, which are generally less difficult to maintain. However, they may come at an initially higher capital cost to purchase. A homestead will usually have multiple granaries, and the number depends on the average yield size produced by each homestead every year. Table 2 below shows a grounded theory synthesis and summary of these spaces which make up the homestead.

Table 2: Grounded-theory synthesis of the principal socio-spatial categories within the Owambo homestead

Spatial element	**Grounded category**	**Core socio-spatial role**
Eelo / Onu	Threshold and social interface	Mediates the transition between public and domestic life; enables greeting, announcement, recognition, and controlled entry into the homestead.
Omikala	Movement control and spatial mediation	Structures circulation; separates public, semi-public, and private domains; directs visitors toward appropriate receiving spaces.

Oshoto	Reception, deliberation, and communal interaction	Hosts guests, family discussion, teaching, storytelling, conflict resolution, and evening gathering; functions as a key interface between household and community.
Epata	Domestic production and women's sociality	Organises cooking, storage, food preparation, hospitality, and ceremonial labour; anchors a gendered sphere of domestic authority and social exchange.
Ondjuwo	Ritual continuity and symbolic reproduction	Preserves ceremonial and sacred practices linked to marriage, childbirth, and womanhood; retains cultural meaning even where everyday sleeping functions have changed.
Ongulu / Eengulu	Domestic enclosure and everyday dwelling	Accommodates sleeping, living, storage, and increasingly modernised indoor domestic functions; reflects adaptation of homestead life to changing material conditions.
Oshini	Collective labour and food processing	Supports grain processing through shared and gendered domestic work; also functions as a space of cooperation and socialisation.
Etala	Everyday inhabitation and flexible gathering	Provides shaded space for daily tasks, socialising, homework, weaving, and guest hosting; operates as an adaptable daytime living space.
Ouyando	Storage, sustenance, and intergenerational continuity	Preserves harvests and food security; embodies agricultural continuity, inherited craft knowledge, and the material reproduction of the homestead.

The spaces which make up the homestead are erected in an incremental manner, usually starting with the most essential spaces, and increasing in size and complexity to reflect the social makeup of the homestead. Below is an illustration of the sequence of the erection of a homestead on communal land and its components described above which culminates into a typical homestead as illustrated in Figures 21 and 22 below.

There are specific circumstances in which homesteads are established by people who have not recently married. One such situation occurs when a man decides to move out on his own. Usually, this is either because of personal ambition to own his own homestead, due to unresolved conflicts, or because he anticipates marriage in the near future. It is also common that a household may lack sufficient space and therefore need an appropriate setup. In this case, family members or others from the homestead may assist the individual who has decided to relocate in establishing their new homestead. Women may also establish a homestead under similar circumstances. If a homestead is established for reasons other than housing a newly married couple, the process remains largely the same as described above. The TA is still

involved in allocating land, and the community and family of the person establishing the homestead continue to provide assistance.

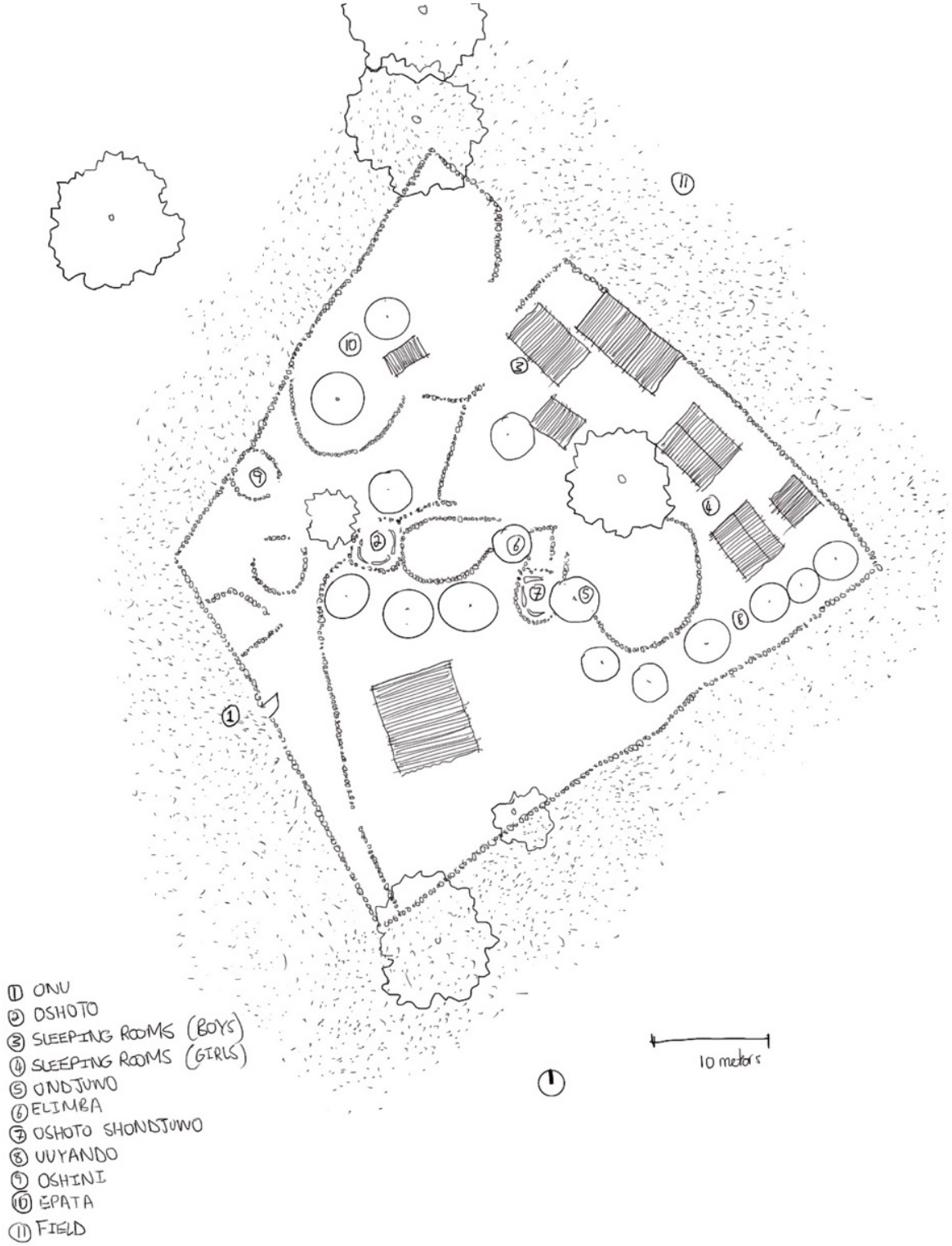

Figure 21: Typical layout of an Owambo homestead in the Ombalantu communal area

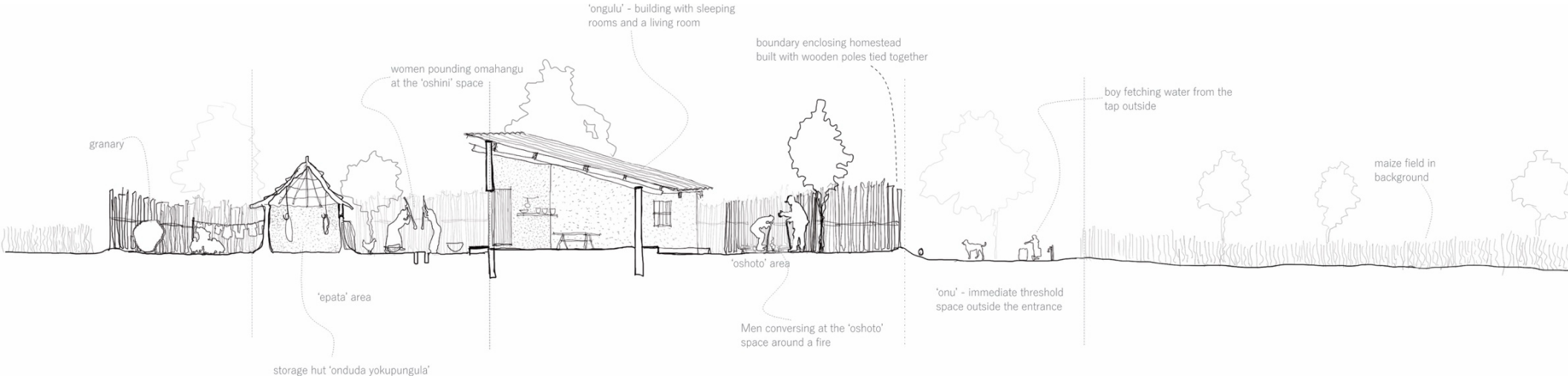

Figure 22: Typical section through a homestead in the Ombalantu communal area.

5.4 Typomorphological Survey

The section below presents the analysis of the spatial assemblage of the homesteads at the nexus of urban and communal land in Outapi. A survey exercise and unstructured interviews with the traditional authority on the spatiality of the homestead on communal land analyse the spatial assemblage. Further interviews conducted in the homesteads with residents have also been used to establish important spatial relationships and analyse the spatial changes in the homesteads. The Owambo homesteads in the Outapi Ombalantu nexus, as in the other areas of Owamboland, are constantly changing due to various factors such as a change in the number of people in the homestead, the socio-economic position of the people in the homestead and external factors such as the interest of this research which is the urban planning bylaws and practices. The research avoids establishing a stagnant or "traditional" typological classification of the homestead, especially regarding materiality, as this constantly evolves. As other ethnographic style research which focused on cultural elements also states that culture is not fixed or monolithic, and in this regard, John (2019) states that any fieldwork ethnographers undertake is "merely a subjective snapshot" (p. 51).

The survey does not attempt to prescribe what would be categorised as the "traditional" homestead based on spatial characteristics; rather, it attempts to provide an account and interpretation based on the observations. It was, therefore, important to extract the important spatial relationships which define the spatial practices of the homestead and to focus on those side by side with basic material characteristics of each homestead, rather than unique spatial characteristics of specific homesteads which could not lead to saturation of the observations in order to understand the spatial changes in the homestead at a macro scale at the nexus. More in-depth analyses of the non-spatial aspects are conducted using different methods in later sections of this chapter.

Figures 23 and 24 highlight the Onakayale area which is where the homesteads which have been incorporated into the newest town boundary are located. They are numbered across two snapshots, one in 2003 (Figure 23), and the other in 2023 (Figure 24) for comparative analysis to understand the changes which have occurred. Homesteads on communal land in close proximity have also been analysed and are highlighted in Figure 25. The area used for the survey of communal homesteads is called Ohamautsi and its spatial relationship to Outapi and Onakayale is shown in Figure 35 under section 5.5.1.



Figure 23: Aerial photograph of the selected communal homesteads in Outapi in 2003.



Figure 24: Aerial photograph of the selected communal homesteads (now proclaimed Urban land) in Outapi in 2023.

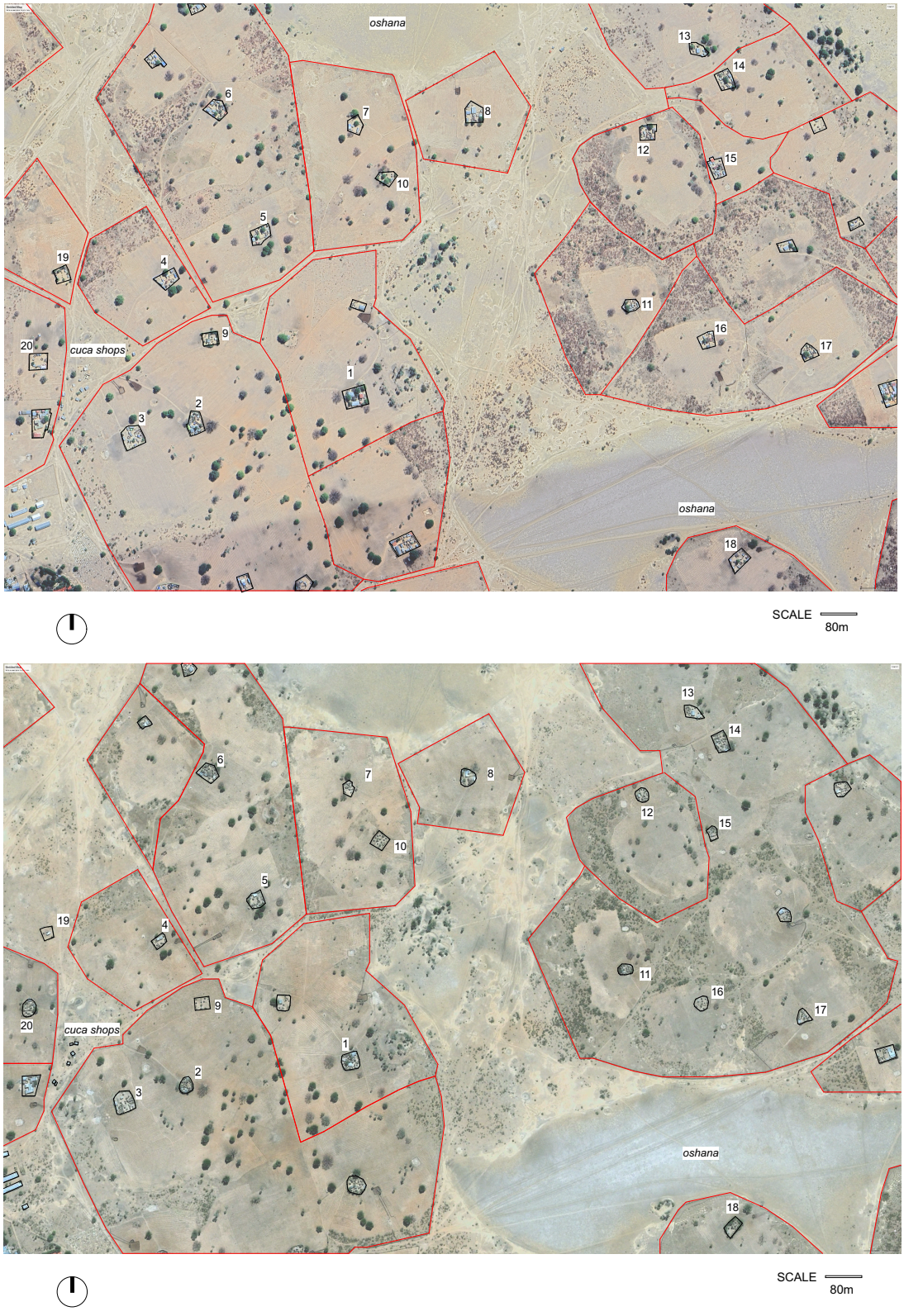

Figure 25: Aerial photograph showing the selected homesteads for the typomorphological survey showing homesteads in the Ombalantu communal area. The image above captures the area in 2003, the image below in 2023.

5.4.1 Spatial change in the homesteads

An analysis of the homesteads at the nexus was conducted to investigate the spaces and their functions, as well as the relationships between spaces, considering their proximity to each other and the spatial depth of the homesteads, in a comparative manner to understand the changes in the homesteads between 2003 and 2023. This analysis shows how the agency of the people in the homestead has changed them, and also illustrates how some changes have occurred as a result of the urban proclamation processes. The homesteads on urban land have been subject to compensation for communal land policy since the proclamation of the new townlands in 2006. The subsequent minutes of the community engagement and planning processes span the years 2006 to 2008, during which the homesteads received compensation to either relocate or upgrade to the urban standards imposed.

For this analysis, homesteads from one area for both the homesteads on communal land, and those on newly proclaimed urban land were selected, for a total of 40 homesteads in total, comprising 20 homesteads on communal land, and 20 homesteads on urban land. The number of homesteads selected on urban land accounts for all the homesteads in the newly proclaimed township area, which is the area shown in the Town Planning Diagram shown in Map 1 under appendices. This determined the sample size for the homesteads on communal land in order to keep the sample sizes consistent for analysis. The previous section of this chapter had identified the important spatial elements and the nature of the spatial relationships between them which could be used as a basis for understanding the spatial composition and relationships of the homesteads. For the mapping and survey of the homesteads, quick physical surveys were conducted and compared to historical aerial photographs obtained from the Surveyor General's office in Windhoek, and in some instances, the computer programme Google Earth. In instances where the images and visits could not be used to clearly analyse the spaces and spatial relationships in the homesteads, residents in the homesteads were asked to recall the spaces verbally and through sketches, as shown in Figures 28 and 29 below.

The analysis of the changes of the homesteads was then documented using the computer programme Archicad23 to standardise and document the analysis, which employed relationship diagrams and spatial depth sequence diagrams to analyse the changes in the spaces and spatial relationships as illustrated in Figures 30 and 31 below. The complete typomorphological survey and summaries of the changes of the homesteads are included in the appendices.



Figure 26: A garden of papaya and lemon fruit trees in homestead 06 on urban land in the Onakayale area



Figure 27: Granaries in homestead 05 on urban land in the Onakayale area

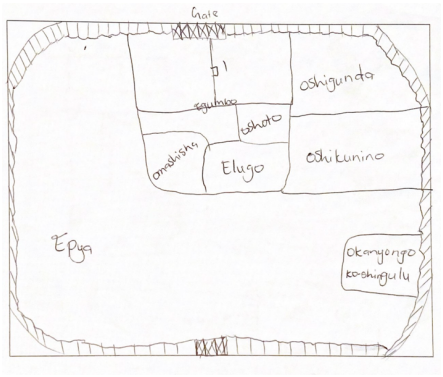

Figure 28: Sketch by person living in a homestead of the homestead before it was upgraded to the urban standard after proclamation of communal land to urban land (Onakayale, Outapi, homestead 05)

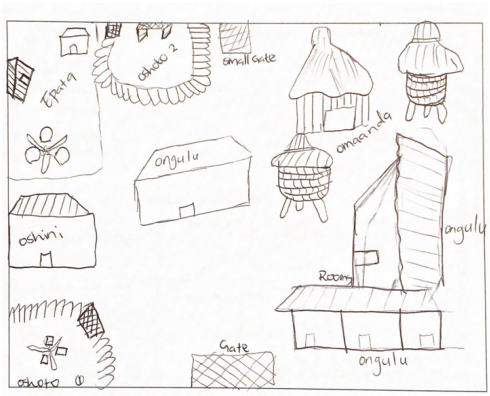

Figure 29: Sketch by person living in a homestead of the homestead after it was upgraded to the urban standard after proclamation of communal land to urban land (Onakayale, Outapi, homestead 05)

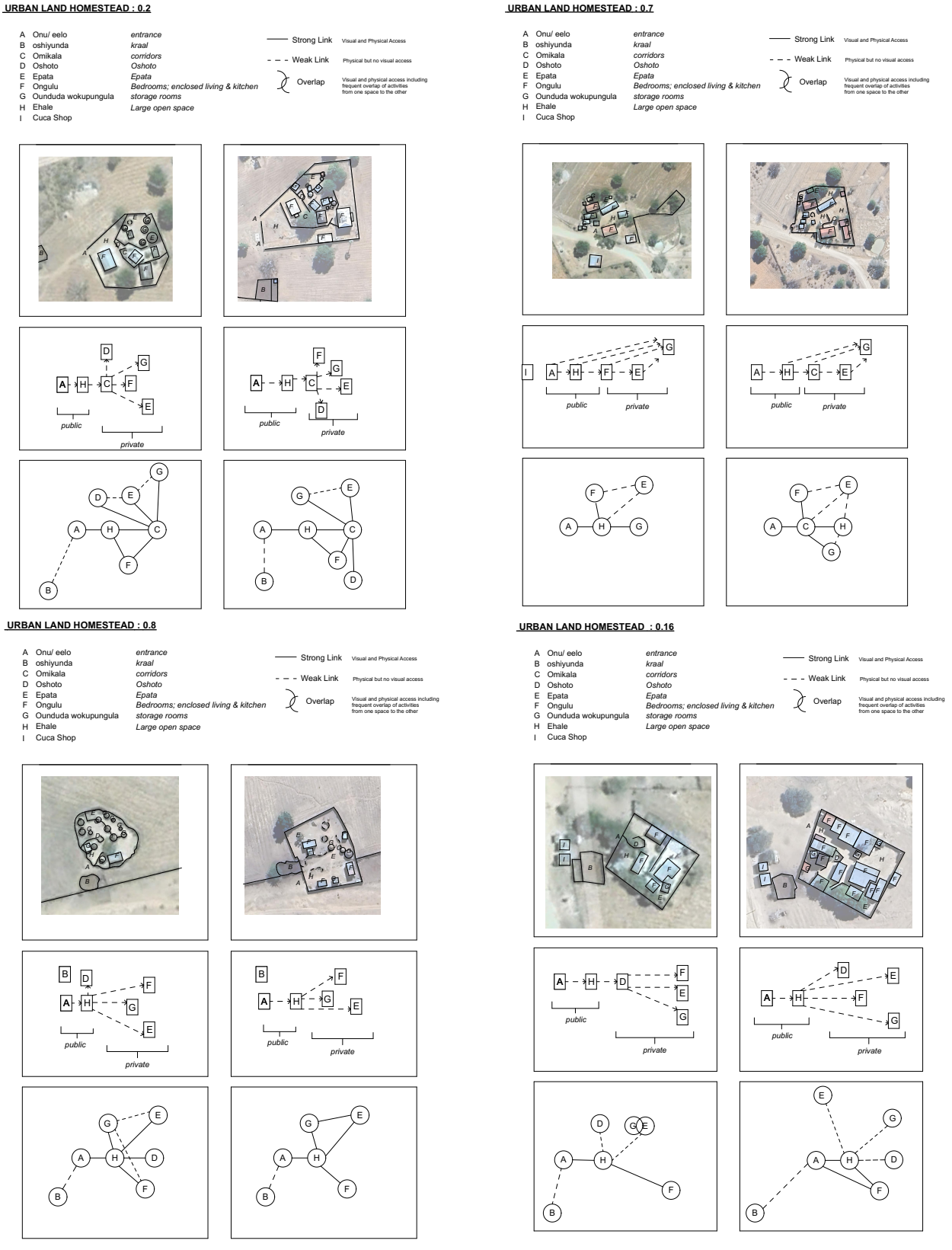

Figure 30: Sample of analysis of homesteads on Outapi proclaimed urban land after 2011. The analysis focuses on the spatial structure of the homesteads between the years 2003 to 2023

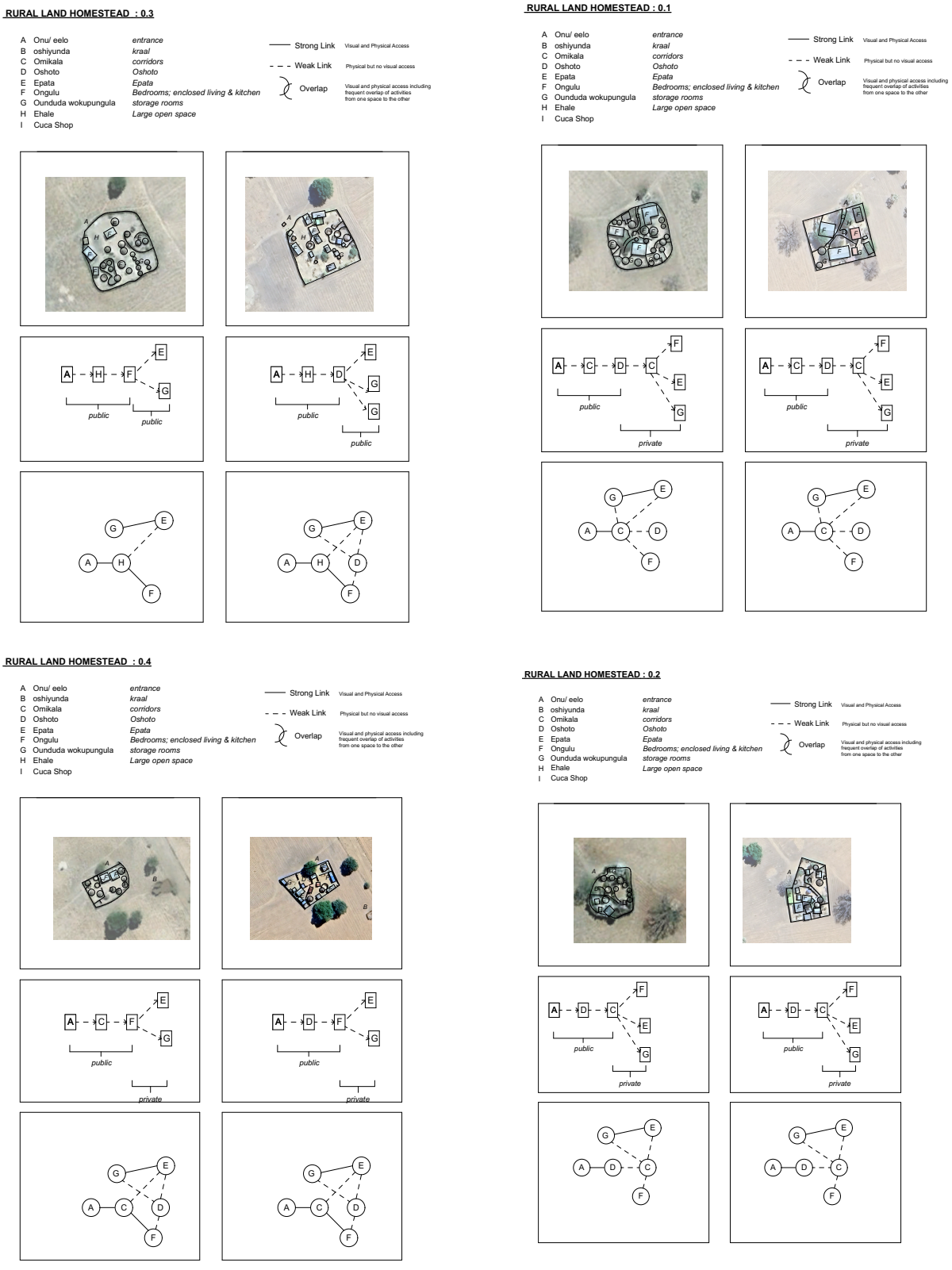

Figure 31: Sample of analysis of homesteads in the Ohamautsi area of communal land 2km east of Outapi. The analysis focuses on the spatial structure of the homesteads between the years 2003 to 2023

5.4.2 Survey findings



Figure 32: Typomorphological analysis of homestead on urban land between 2003 (left), and 2023 (right)

The homestead illustrated in Figure 32 above, which has been incorporated into the town's urban boundary after 2011, shows some changes in the 20-year period from 2003 to 2023. In 2003, the *onu* space (the entrance marked 'A' in the analysis) only had a weak (visual but not physical) connection to the bedrooms, storage rooms and the *epata* space (food preparation space). This was during a time when some of the elements in the house were being rebuilt with more modern material. In this spatial state, this homestead didn't comply with the general spatial relationships and layering as did other homesteads. In the 2023 analysis, many of the architectural elements which reinforce the expected spatial relationships of the Owambo homestead are more present even though it has been incorporated into the urban boundaries. There are wall elements which introduce negative corridor style spaces which mediate a guest's movement throughout the homestead (marked 'C' in the analysis). These reinforce the *ehale* (large open space) as an intermediate space, which has reduced the strength of the spatial relationship between

the entrance and the epata space. This has also increased the spatial depth of the homestead when moving between the entrance and the epata space, which is usually the most private space with many thresholds in between. The cuca shop/home shop (marked 'I' in the analysis), which sold basic food items and some traditional brews made from the harvest, was removed. This was directly as a result of the blocking process by which town planners and surveyors demarcated the outermost perimeter of the homestead for registry at the deeds office, which is subject to bylaws relating to the boundaries, size and placement of structures in the homestead. The home shop fell out of the awarded demarcated boundaries of the new erf on which the homestead sits, and had to be demolished as a result.

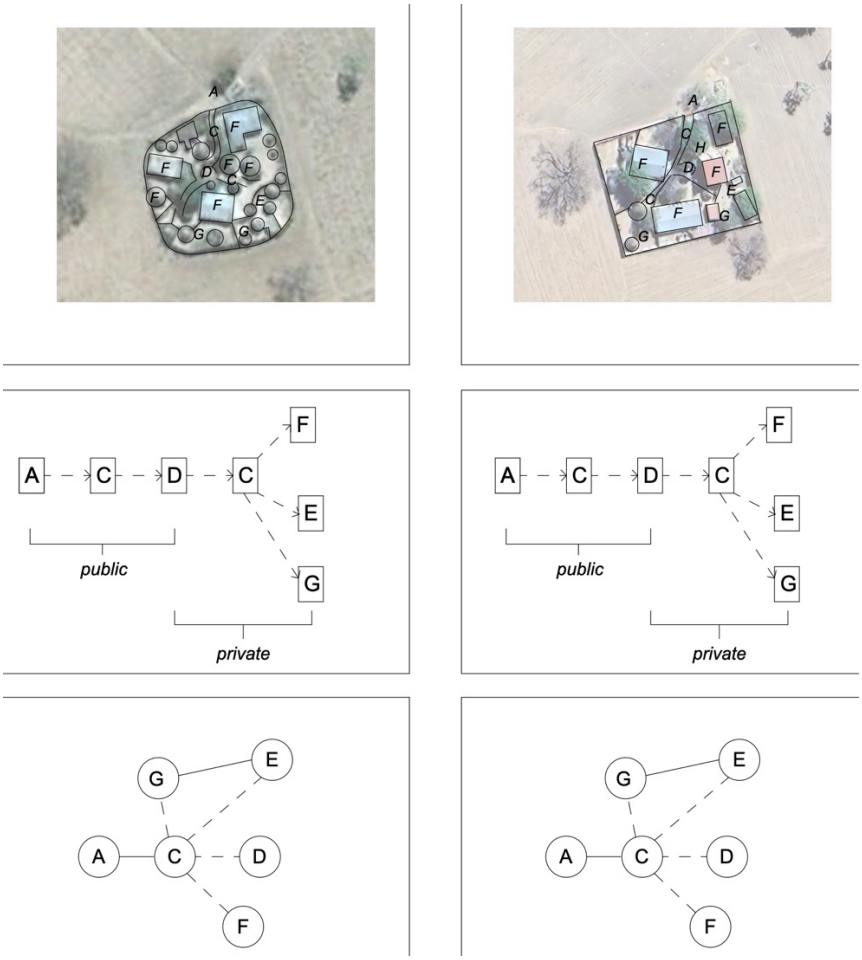

Figure 33: Typomorphological analysis of a homestead on communal land between 2003 (left), and 2023 (right)

The homestead in the analysis above (Figure 33) is on communal land and shows a transition in morphology from single detached rooms (huts), with separate functions as sleeping rooms, storage huts and shading structures, to fewer larger buildings which include a combination of sleeping rooms, living

rooms and storage areas. The shape of the perimeter of the homestead has also changed from the more irregular shape built with wooden stick palisade, to the regular shape constructed with cement bricks. In 2003, the analysis recorded the spatial relationships between the spaces in the homestead as consistent with those expected in a normal setup. The spatial sequence is from the entrance (*onu*) (marked 'A' on the analysis), to the thresholds established by the corridors (marked 'C' on the analysis), which are also constructed out of wooden stick palisade, identifiable by the irregular negative spaces. These direct and mediate movement through the homestead to the *oshoto* space (marked 'C' on the analysis), after which there is another threshold of corridors which then lead to the private areas of the homestead such as the bedrooms and the epata space where food is prepared (marked 'E' on the analysis). In the analysis of the spatial relationships and spatial depth of the homestead in 2023, these have remained the same although the total number of buildings in the homestead has decreased. The epata space where food is prepared (marked 'E' on the analysis) is still the most private space in the homestead, and the mediating corridors still maintain a presence even with a drastic change in materiality.

5.4.3 Core Variables of Change

From the spatial diagrams and summaries, the extracted recurring transformation themes across the urban and communal homesteads were:

Building Typology: singular hut rooms, replaced with cement brick buildings with cellular room configurations.

Boundary Condition: wooden stick palisades replaced with cement brick walls (sometimes taller for security in urban homesteads)

Sequence of Spaces: from public, semi-private to private across spaces like onu (entrance), ehale (open courtyard areas in the homestead), oshoto (reception area) (generally maintained, sometimes compressed)

Key Spatial Relationships: between onu (entrance), epata (cooking area), and oshoto space.

Corridors (omikala) and other thresholds: sometimes introduced (communal homestead 8, 14), sometimes removed (urban homestead 1, 14)

Fields and Kraal: retained in communal cases, largely removed in urban cases

Home shop structures: cuca shops removed in several urban cases

Spatial Depth considering the number of spatial thresholds between the entrance (onu), the reception area (oshoto), and the cooking space (epata): generally preserved in communal cases; reduced or re-ordered in many urban cases.

The matrix below in Table 3 presents a comparison of the changes in communal and urban homesteads across the core variables of change.

Table 3: Comparative matrix comparing the changes in the communal and urban homesteads across core variables of change

Change	Communal Homesteads (2003–2023)	Urban Homesteads (2003–2023)
Building Typology	Gradual replacement of huts with larger cement brick structures; some huts retained for storage	Widespread replacement of huts; modern cement brick houses dominate; sometimes single consolidated house
Boundary Condition	Almost universally upgraded from stick to cement brick walls	Same upgrade, often with increased height for security
Sequence of Spaces	Largely preserved (public to private depth intact, sometimes enhanced with added *oshoto* or corridors)	Often compressed; in some cases entry leads directly to open area/private spaces
Spatial Relationships	*Onu–Epata–Oshoto* triad preserved; new proximities emerge with added spaces	Mostly preserved but altered in orientation (e.g., *oshoto* displaced, entrance leading differently)
Corridor/Thresholds	Sometimes introduced or kept to create privacy (*corridor spaces*)	Often removed, replaced by direct spatial transitions
Fields/Kraal	Retained or adapted	Removed in most cases
Commercial Functions	Rare	Cuca shops removed or reduced
Overall Trend	Incremental consolidation but strong continuity of typology	Strong transformation under urban standards; loss of agricultural/commercial elements; security-driven enclosures

The core variables of change as summarised in Table 3 above show that although the homesteads, both those on communal (*rural*) land and on urban land have experienced much morphological and material change within the analysed time period, the key aspects have been in the spatial relationships between key spaces, a decreasing spatial depth as the homesteads on urban land respond to planning regulations, changing social structures within the homestead, and spatial changes relating to changes in livelihood strategies. In the homesteads on communal land, the analysis shows that the homesteads continued to increase or maintain the spatial depth comprising the different spatial elements in the homestead, which in a way may be interpreted as reinforcing the spatial assemblage of the homestead. In most homesteads analysed on communal land, spatial elements such as corridors (*omikala*) which mediate public and private spaces were maintained, and spaces such as the cooking area (*epata*) remained separated physically and visually from more public spaces such as *oshoto* in a more robust manner. The *epata* space was maintained at the furthest spatial depth of the homestead, as it is considered the most vulnerable

and sensitive space within the homestead, which is shielded by other spaces such as the *oshoto* space. This is a resilient practice within the spatial planning of the homestead even today. Both communal and urban homesteads developed in their material structure, which can be easily visible and analysed by the replacement of many rounder thatched roof structures by fewer larger square and/or rectangular structures.

Table 4 below shows that both homestead types retain a stable domestic core, especially F (single buildings/*ongulu*), E (food preparation space/*epata*), and H (large open space/*ehale*), but the communal set more consistently preserves intermediary spatial devices, especially C (corridor/*omikala*) and D (reception/*oshoto*). The urban set shows more cases of direct entrance-to-enclosed-space relations and more reduced networks, which supports the synthesis that urban spatial change is more compressive, consolidating, and reformative, while communal spatial change remains more additive and mediated.

Table 4: Preliminary coding summary of recurring spatial elements and relations in relationship diagrams

Code / variable	**Meaning**	**Communal homesteads (n≈20)**	**Urban homesteads (n≈20)**	**Analytical reading**
C presence	(*omikala*) Corridors	11	7	More persistent intermediary (*omikala*) circulation in communal cases
D presence	Oshoto	13	6	Stronger retention of semi-open transitional social space in communal cases
H presence	Large open space	16	17	Present in both, but function appears reworked in urban cases
G presence	Storage rooms	15	17	Storage remains important and may become more discretised in urban plots
E presence	Epata	20	17	Core cultural/domestic element retained, though somewhat thinned in urban set
F presence	Enclosed rooms / living / kitchen	20	20	Stable core domestic programme across both sets
A→H	Entrance linked to large open space	14	16	Both sets still often organise entry through open space
A→C	Entrance linked to corridor	5	2	Stronger mediated entry sequence in communal cases
A→D	Entrance linked to oshoto	2	0–1	Weak but still more evident in communal cases

A→F	Entrance linked directly to enclosed room	rare	~6	Urban cases more often compress access into enclosed domestic space
Reduced networks	Very simplified networks with only 2–3 nodes	0	3	Urban set more prone to simplification/compression
Approx. mean node count	Number of coded spaces per diagram	5.8	5.5	Similar overall size, but urban set shows more reduction in some cases

5.5 Everyday life in homesteads within the case

5.5.1 Introduction to the observations of everyday life in the homesteads

This section presents a detailed account of the observed experiences in the homesteads selected for this research, conducted through participant observation as part of the grounded research. The participant observation lasted for a total period of 4 months, comprising multiple separate visits to the homestead in the cases in this section, and covered a total of 9 homesteads (3 homesteads within the urban area, 3 homesteads on communal land, and 3 homesteads which had been re-established on communal land outside the newly proclaimed urban boundary). It is important to declare that the lived experience in these homesteads cannot fully reflect those of a resident in the homestead or a family member because the research cannot fully establish the same social relations as those held by residents the limited length of the period spent visiting the homesteads, as well as customary rules I observed to ensure that the research participants were comfortable. The researcher, therefore, also relied on his own experience living in the Owambo homestead of his family. This section does not present a comparative observation of each homestead; the researcher attempts rather to describe the different aspects of domesticity observed in the homesteads to cover the widest possible range of observations, experiences, meanings, and interpretations and present the themes which emerged from employing this method. Figures 34 and 35 below show the sketch map of Outapi and the surrounding areas such as Onakayale and Ohamautsi for reference.



Figure 34: Aerial photograph of Outapi. Source: Google Earth



Figure 35: Aerial photograph of Outapi, with diagrammatic annotations. Source: Author

5.5.2 Case 1: The homestead in communal land, Ohamautsi - Incremental upgrades and claims to communal land.

Background to the homestead

Tk[8] Shilongo's homestead is close to Outapi, in a small village within the Ombalantu communal lands. The homestead is located relatively close to the Catholic mission, which hosts a clinic and a secondary school. It is also close to a separate government secondary school and primary school, which many of the young people of school-going age in the village attend. The homestead is accessed via a 2km tarred road, which later terminates on a gravel road, and a walking route through the Catholic mission, and through the maize fields of neighbouring homesteads, separated by small communal gates to prevent cattle from grazing on the maize fields. Two other longer routes around the Catholic mission can be used, which create access through narrow and long movement servitudes between maize fields, which usually terminate into large open *Oshanas*[9]. These two routes also pass through communal areas with small cuca shops frequented by the young and elderly in the village.

The homestead is connected spatially, socially, and economically to the macro and micro contexts around it in various ways.

The general process through which a homestead is established on communal land through the Traditional Authority and headman is briefly discussed in the introduction; however, in order to understand some of the dynamics in more detail, I explored the homestead on communal land in more detail to evince its connections at a communal scale. The establishment of the Shilongo homestead happened according to customary practice by the Aawambo, which affords a married man and woman some land allocation through the Traditional Authority to build a homestead. In the case of the Shilongos, Tk Shilongo initially migrated from another communal area east of Outapi, and was allocated this land after he married his wife. Tk Shilongo is one of many siblings who all settled in different areas of communal land from Okalongo where they were raised. Mk Shilongo came from a small settlement in a neighbouring communal area. The area of Ohamautsi where they settled was a highly sought after area as it was close to the Roman

[8] Tk is an abbreviation for Tatekulu which is a title given to an elderly Owambo man, particularly one who is a grandfather. Memekulu is the title given to an elderly Owambo woman, particularly one who is a grandmother. It is abbreviated Mk.

[9] An oshana is a large flat and open wetland area usually unsuitable for building as it is below the waterline during the rainy season.

Catholic mission which has a school and a clinic, as well as the town of Outapi although it was not much more than a military base with a district hospital, some offices for the TA, and a tarred road to Oshakati at the time. Once their homestead was established, Tk and Mk Shilongo relied on subsistence farming of cattle, maize and other produce to feed the homestead. They however also took part in the *cuca shop* economy where Tk Shilongo would travel to Oshakati which at the time was a larger apartheid government administrative centre with shops where they could source items such as sweets and biscuits to sell at their cuca shop. They also made local brews such as oshikundu, ginger beer and *epwaka,* a local alcoholic beverage sought after by the men in the community*,* using the millet harvested from their field at their cuca shop.

Tk Shilongo lives in his homestead with his wife, Memekulu[10] Shilongo, some of their children, grandchildren, and a younger member of the homestead who is not part of the family but attends the nearby secondary school and assists with general labour in the homestead's maize field and herding the animals belonging to Tk. In total, the homestead houses 9 people on a regular basis and a further 5-6 family members occasionally when they visit. The homestead relies primarily on subsistence farming, through produce from the large maize field which surrounds the homestead; however, one of Tk's youngest daughters, Meme Pena, is formally employed some distance away. She, therefore, only spends weekends at the homestead, and this allows her to assist Mk Shilongo with cooking, cleaning and other domestic chores. Throughout the week, these tasks are taken care of by Mk Shilongo with assistance from her granddaughters when they return from school in the afternoons. One of Tk Shilongo's youngest sons, Pandeni, is employed in Outapi, and his income also contributes to some of the homestead's needs.

[10] Memekulu is the title given to an elderly Owambo woman, particularly one who is a grandmother. It is abbreviated Mk.



Figure 36: Reference aerial photograph of Tk Shilongo's homestead on communal land. Source: Google Earth

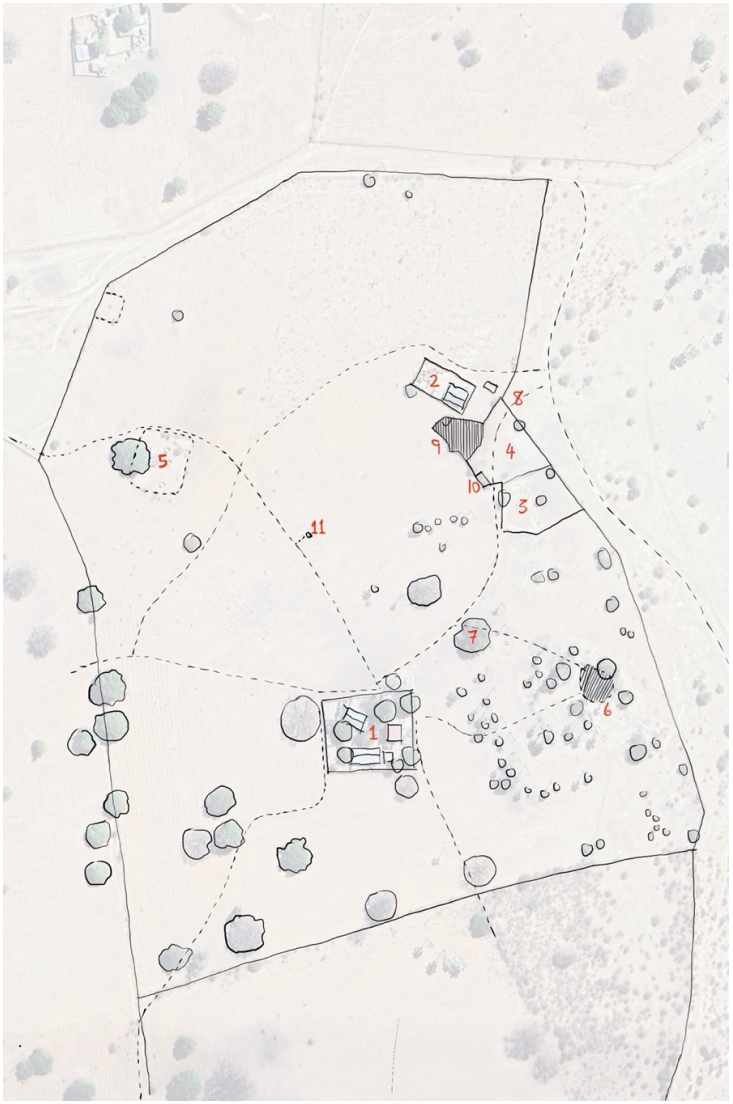

Figure 37: Reference aerial photograph of Tk Shilongo's homestead with annotations. Source: Author

Legend for Figure 37:

1. Tk Shilongo's homestead
2. Mk Josephine's house built through a National Veterans housing programme
3. An area used to sun dry millet
4. A threshold space leading to the kraal
5. Area previously occupied by Tk Shilongo's brother's homestead before he relocated (reasons not related to urban expansion).
6. Water well
7. Large fruit tree under which the children socialise
8. Main vehicular entrance to the field and kraal
9. Kraal
10. Pigsty
11. Pit latrine

The architecture of the homestead

The homestead's material assemblage is in a state of transition, and there are a few partially complete structures which have been under construction, and others which are growing incrementally over the years. Most of the homestead is enclosed with a low, newly built, unplastered cement brick wall about 1.1 metres high, with corrugated metal sheets used to increase the height of the boundary wall to about 1.6m high in some spaces. This is incrementally replacing the other half of the enclosure, which is built with a palisade fence of wooden sticks, as it has been over the years before. The interior of the homestead is composed of an eclectic material assemblage, which includes structures housing Tatekulu and Memekulu's bedrooms (marked Q on Figure 38). This structure is constructed of plastered and unplastered cement bricks, a screeded concrete floor/surface bed, and timber and corrugated metal sheet roof without a ceiling. The structure also houses a living room, accessed through a glass sliding door leading from a veranda. A double-loaded corridor provides access to 3 bedrooms and a food storage room (marked R on figure 38) and terminates at the back of the building, an area which houses a detached outside shower and urinal. This structure was built about 15 years ago to replace an older and currently dilapidated and vacant structure which housed the bedroom of Tatekulu and Memekulu as well as two other bedrooms and a food storage room as well (marked B on figure 38). The construction was funded by their eldest daughter, Meme Maria, who works and resides in the capital city, but often visits during December months and occasionally during other times of the year. Jonas, one of Tatekulu's sons, has also begun construction of his own structure within the homestead. It is a 2-storey structure housing a large living room and two rooms on the ground floor, and a staircase leads to a further 3 rooms and a balcony on the first floor (marked C on figure 38). The building is half-completed, constructed of cement brick, a concrete column and beam structure, but stands without standard finishes such as tiling, windows, and a roof. Although the structure has remained incomplete for about five years, he intends to complete it once the funds are available, and in the meantime, the people in the homestead have already begun to use some of the rooms on the ground floor for storage. The other large building (marked I on figure 38) in the homestead has been built by Pena, one of Tk's daughters, who has 3 children. It is one of the most recently completed buildings in the homestead, a single-storey, plastered, and painted cement brick structure with a living room, three bedrooms (one of which is occupied by her brother, Pandeni), and a veranda. The building is tiled and has a ceiling although it is relatively hot, leaving the veranda as the most popular space to spend the day. A recent extension in the past year has added a living room and bedroom by enclosing part of the original veranda, and was built as customary practice to house the bride during a family wedding ceremony (marked W on figure 38). It is now vacant and only occupied when she visits

around December each year. The rest of the homestead is spatially organised with the *oshoto* (marked O on figure 38) at the centre connected to the entrance through a long corridor (marked T on figure 38). The *epata* area is at the furthest end of the homestead and is made up of a large open area for outside cooking, a hut built with cement bricks and a thatched roof used to keep the local brew *oshikundu* and other stored kitchen items, as well as a semi-enclosed corrugated metal structure used for outside cooking. There are also numerous vernacular style structures in the homestead which are 30 years or older such as the *oshini*[11] (marked P on figure 38), and multiple storage rooms of the vernacular hut typology, which many years ago, were before the homestead modernised its material, were used as bedrooms and other more habitable functions (marked G, H on figure 38). The *epata* is an important space in the homestead and is located at the back of the homestead and includes many spaces for different functions such as a room for *oshikundu* and water (marked V on figure 38), a semi-enclosed cooking space built with a combination of corrugated metal sheets cladded to poles, as well as steel meshes used to provide enclosure while allowing ventilation (marked K on figure 38). Newer storage rooms built with cement bricks, small steel windows and corrugated metal roofs are also part of the *epata* space, one of which was built as a storage room for the wedding (marked M on figure 38), and a more recent storage building constructed quite neatly by Pandeni as a personal project to initiate his venture into the construction industry (marked L on figure 38). Vernacular millet granaries are located close to the *epata* and are shaded and protected from rain with a corrugated metal roof on wooden poles (marked U on figure 38).

Everyday life and domesticity of the homestead

Everyday life in the homestead revolves around subsistence farming and caretaking chores. Every morning, breakfast is prepared for the children, which is usually a loaf of bread and tea bought from the local *cuca* shops in the village or bought in town by Pandeni on his way from work every day. Children are prepared for school by Memekulu, while Tatekulu tends to the goats and the pigs every morning. Many of the house chores are still done by Memekulu and Tatekulu despite their ages because the younger children often have to go to school in the day, and to study sessions in the afternoon. Meme Pena often assists with the daily chores such as cleaning and preparing dinner on weekends when she is not away with work.

[11] A small hut enclosing a space used to pound millet

Vignette 1*: It is late afternoon at around 18h30 and Pandeni is walking into a quiet homestead on his way from work in town. His voice permeates through the corridors of the homestead as he greets Tatekulu who is also walking towards the homestead behind him after an early evening stroll which included an inspection of the fence around the field and herding the goats into the kraal. He greets me and takes a seat beside me on an old wooden log at the oshoto space to take a rest and begins to greet me and tell me about interesting construction details he has seen in town, and how he could incorporate those to solve some of the building problems they are experiencing with Jonas's construction project. "I have noticed that if you use the steel profiles supplied by the Chinese in town, it can significantly reduce your construction cost. The Chinese are so creative and smart!' he adds. I have noticed that you can even construct a 'verdieping" using those steel profiles... they place concrete and then they finish it off with tiles'. Those guys are very smart (referring to the Chinese), they know how to make the construction process simple and economic." "When you do it that way, the house will look even more developed"*

As Tatekulu enters he begins to scold us and complain about jerrycans which have been left unattended at the tap outside the homestead. He then proceeds to ask us why we have not started a fire at the oshoto space tonight and a few days prior. He instructs one of the younger boys who was standing around the space to get a spade later when it gets darker, and to collect hot surplus charcoal from the epata space to light a fire.

This vignette, particularly the opinion expressed by Pandeni, reflects how residents' material and spatial experiences of town or urban areas generally shape the material and spatial transformation in the homesteads on communal land. Usually, those who are employed formally or informally in town have the financial resources to fund the erection of new buildings in the homestead. When they do, perceptions around which materials are more "modern", or specific building and architectural elements to incorporate are influenced by their observations and experiences in town. In some interviews, it was expressed to me that this influence goes as far back as when Aawambo men were contracted for the contract labour system under the colonial and later apartheid government for up to 18 months at a time. The men would often come back with sophisticated ideas and some little money which was then used to begin transforming the homestead in a material sense. It however goes beyond historic events and today is even more related to the ambitions which younger employed people have relating to the domestic space. As an example, Pandeni's room is quite specifically furnished to reflect his personality and his ambitions. Although he only has claim to one room within a building built by his older sister Meme Pena, his space could easily be

mistaken for a bedroom in a modern house within the city when compared to the minimal and rather functional furnishing of the other rooms. The material choices involved in the transformation of the homestead's material assemblage are also affected by tougher environmental policies which came into effect after independence in 1990, largely as a response to deforestation throughout the 20th century caused by population growth in Owamboland (Kreike, 2010). The other architectural expressions in the homestead are usually more motivated by experiences reflected in the use of terms like “verdieping” which is an Afrikaans language term for a storey of a building usually above the ground floor. Spatial experiences and observations in urban areas lead to these elemental interpretations of form and connection to words like ‘developed’.

During the time period in May, the family has just harvested the millet, a process which involves removing the seeded head of the millet plant and placing them in heaps on an open area called *oshipale to sun-dry*. Tatekulu and Memekulu later walk to the *oshipale* to spend the morning threshing millet heads to separate the grain from the stalks and chaff. It is also generally a time they spend time together and discuss specific matters. As the heat of midday arrives, they settle into the shade of one of the many large bird plum trees sparsely populating their field.

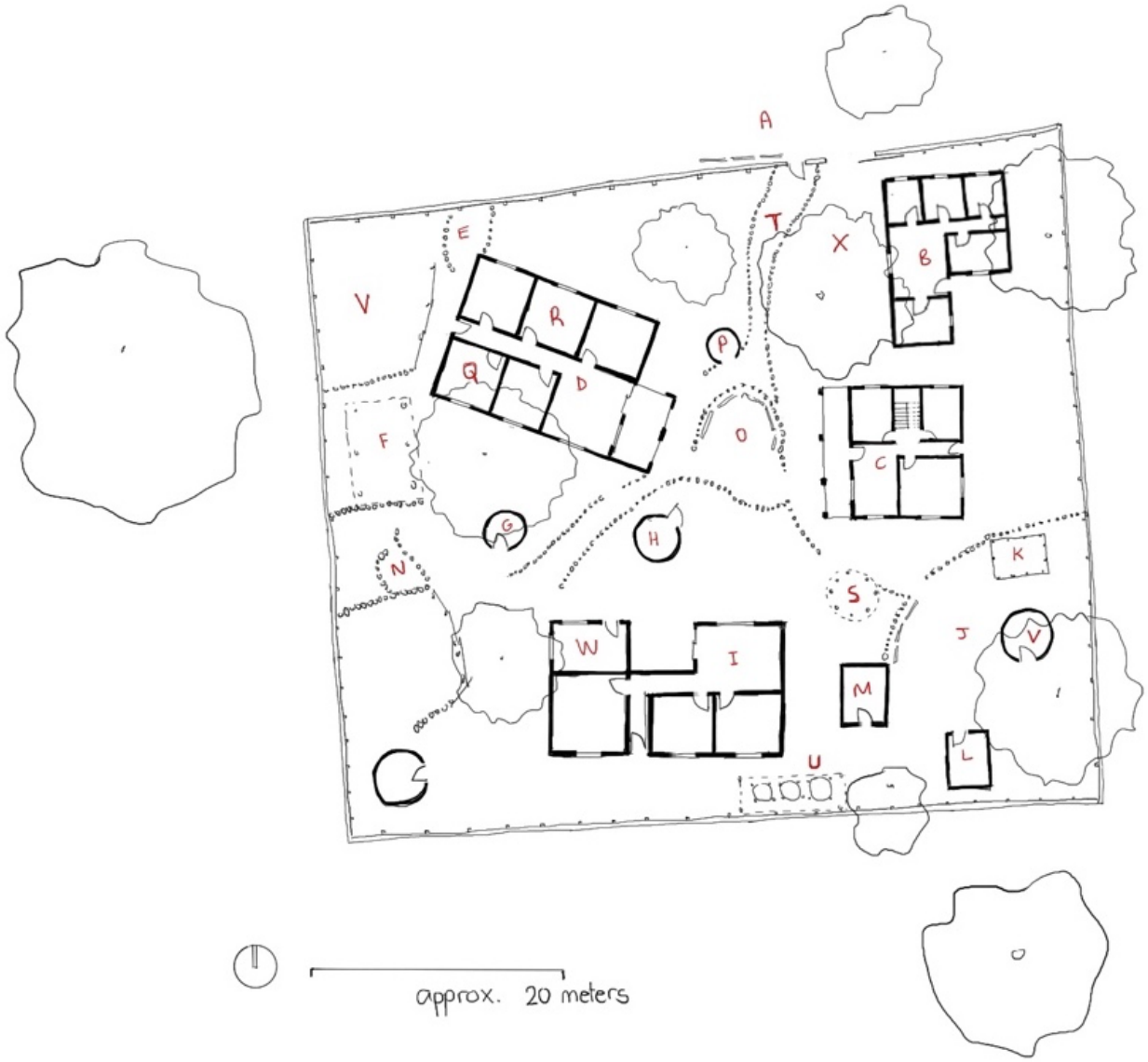

Figure 38: Detailed floor plan layout of Tk Shilongo's homestead on communal land. Source: Author

Legend for Figure 38:

A: *Onu* (entrance area)

B: Pandeni's current building project. It is the refurbishment of the old main building of the homestead.

C: Jonas's new double-storey structure which houses a living room and bedrooms

D: living room in the current main building of the homestead. This is where Tk Shilongo and his wife spend the evenings

E: Area demarcated for showering

F: *Etala* (covered outdoor area initially built for Tk Shilongo's eldest daughter's wedding many years ago).

Tk Shilongo often rests in this space during the day.

G: Storage hut used to dry meat

H: Decommissioned storage hut (built with mud blocks)

I: Living room area in one of the newer cement brick buildings

J: Epata area

K: Enclosed shack used for indoor cooking (particularly when the weather doesn't permit indoor cooking)

L: Enclosed dry food and food preparation equipment storage

M: Additional storage for the *epata* space

N: Shower area for the residents

O: *Oshoto* space

P: *Oshini* (enclosed room used to pound sorghum into powder/flour)

Q: Tk and Mk Shilongo's bedroom

R: Indoor food storage room

S: Open veranda used by the residents during the day

T: *Omikala* (corridor threshold leading into the homestead)

U: Old chicken coop area… currently used to dry sorghum seeds.

V: Traditional brew storage hut

W: Living room extension built to host bride preparation activities during Ndapewa's wedding

X: Vehicle parking area under the shade of a tree

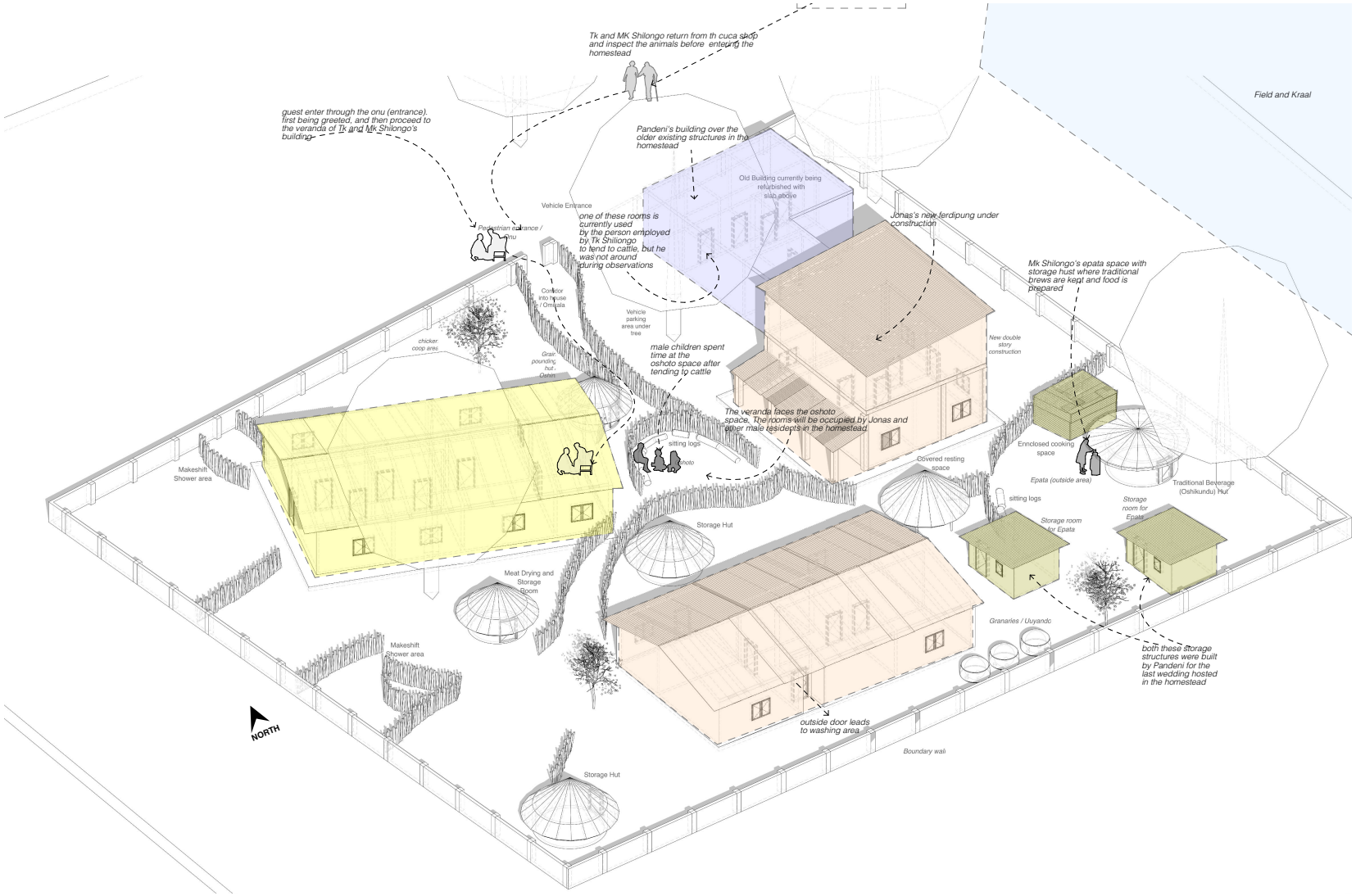

Figure 39: Detailed drawing of Tk Shilongo's homestead on communal land with spatial references. Source: Author

The inter-connection of closely related homesteads

Within the larger area that Tk Shilongo's homestead is positioned, sit two other smaller homesteads which are an unoccupied derelict homestead once lived in by his late younger brother and another lived in by his older sister which is less of a homestead in its spatial layout and materiality, but more a modern 3 bedroom house built for his sister under a government housing scheme. The site where Tk Shilongo's homestead sits has previously been home to his parents who had many children. As per customary practice, the heads of the homestead (usually a married couple) would nominate one of their children to inherit and continue to live in the homestead. The person nominated to inherit the homestead is usually male as the women often relocate to the homestead of the men after marriage as per customary practice. When the nominated son is married, in this case Tk Shilongo, his wife then relocated from the area of Okalongo (about 20km east of Outapi) to live with her husband. This meant that the homestead now had two areas designated as *Epata*, that which was initially established by Tk Shilongo's mother, and the second by his wife, Mk Shilongo as customarily this is the quintessential space established for the woman after marriage from where she prepares food for her husband and children. When the homestead has two *Epata* spaces, the use of space around the homestead is negotiated and this is usually different from family to family. In the case of the Tk Shilongo homestead, the men and young boys from the larger family structure ate together, receiving food prepared from both *Epata* spaces. The entire family would practice religious devotion together at the *oshoto* space. Interactions between the two *epata spaces were* seldom, and usually happened in the form of sharing of food items and ingredients and sometimes labour to prepare food if one of the women or girl children were away. The maize field is divided into two sections and shared. After the rains, each section of the larger family would work their part of the field together. The two sections of the family would work the field starting at different sections, working the field towards each other and usually meet in the middle. All these aspects are negotiated and differ from homestead to homestead based on family dynamics. When Tk Shilongo's younger brother married, he made the decision to hand his younger brother a part of the land to establish his new homestead. This was primarily motivated by the fact that there was sufficient land available. His brother established his homestead (marked '5' on Figures 36 and 37) which remained active until he relocated later on. When Tk Shilongo's parents eventually passed away, his older sister Mk Josephine who had returned to the area after many years away and had returned to stay with her mother, continued to use the *Epata* space left by her mother. She later became the beneficiary of a housing scheme. Tk Shilongo explains that the family deliberated on its spatial needs and determined the new position of her new government funded 3 bedroom house on the northeast corner of the family's land (marked '2' on Figures 36 and 37). The

decision to apply for and accept the housing scheme was motivated by the homestead's struggle to meet the spatial needs of the growing family with two sections, taking into consideration ever changing family dynamics. Today, Tk Shilongo's older sister stays with her grandchildren and the two homesteads continue to work together as one larger extended family unit. Tk Shilongo has now nominated his youngest son Pandeni as the heir to the main homestead. Customarily, this nomination is often given to the youngest male son and is seldom rushed as the youngest son is usually the last to get married. The different homesteads continue to share the resources available on the larger piece of land, including the water well on the land (marked 6 on Figures 36 and 37) (the water well is maintained every year by members from the homesteads), various fruit trees which are important as a source of food during drought, and the yield from the maize field. A specific practice between these homesteads is that grain harvested in the field was usually kept together and shared between all the homesteads, keeping the grain in collectively owned granaries in the original homestead. This relationship between the homesteads is a case example on how many homesteads can be related and share different resources essential to their subsistence.

Vignette 2

On one of my afternoon drives heading to Tk Shilongo's homestead, I'm greeted with the familiar silhouettes of Tk Shilongo, Mk Shilongo and Nailonga, as they also make their way to the house. The three of them walking almost hand in hand, were coming from the cuca shops close by to Tk Shilongo's homestead. As I had seen them do many times before, at this time of the early evening Mk Shilongo would head home to start on supper, and Tk Shilongo to make sure the boys have returned from the cattle and goat herding with all the livestock. As they hear the sound of the car behind them, they step out of the sandy tire tracks and look back. As I drive slowly about to pass them they realise it's me with excitement; I open my window, and before I can gesture them to get into the car, they decline and emphasise that the walk is good for them and they are far too close now for the lift. Nailonga on the other hand decided to accept my offer and climbed into the car. Nailonga is excited about the car, and makes jokes about how seldom the opportunity for a free ride in a "nice car from the city" comes along in the village. Nailonga left home a few years ago with her fiancé to start their lives in the informal settlement in Outapi; she has come home as she often does to assist Tk and Mk as they have gotten much older and need all the assistance around the home very often. She tried to be home a few days out of the week. The rest of the days, she tended to her small home shop in the informal settlement.

The drive is very short and is over almost as soon as it starts. As we approach the gate to the fields, the kids in the house hear the car and race to the gate. The winner gets to open the gate and get into the car, while the rest have to wait for Mk and Tk, who are trailing on foot behind.

As soon as the car makes its stop under the large shade tree, Nailonga jumps out and calls to Sunday; Sunday is one of the younger girls living with Mk and Tk Shilongo. She calls to Sunday to issue instructions for dinner preparations. These are done as early as possible to avoid cooking in the dark, as there is no electricity at Tk and Mk's homestead. Tk and Mk Shilongo are making their approach to the house very slowly. I walk to them, and once I get there, they are very eager to hear about their friend who I had interviewed earlier in the week.

The vignette above shows the relationship between the communal area and urban area in terms of the people who live in and claim urban land to access the opportunities in the urban area. Nailonga moved to an informal settlement close to Outapi. She and her fiancé constructed a small shack in the informal settlement to be close to their informal vending stall, in Outapi. Nailonga prepares and sells fresh food items such as fish, meat, eggs and pap[12] to people at an informal taxi rank. There still exists a negative perception around the proliferation of shacks, especially in instances when they have encroached onto communal land, where people build the shacks to create housing and business opportunities (sometimes the shack is built by someone who has a house in town but rents it out to people in the informal settlement for additional income). As a result, Nailonga is often urged to spend time at home with the elders in the family in order to assist Tk and Mk Shilongo with daily homestead responsibilities which Mk Shilongo is often occupied with. Nailonga has no formal qualifications with which to attain a formal job, which leaves her in a situation where informal trading is her best option. In Tk Shilongo's homestead, Nailonga helps with daily activities such as cooking and cleaning. When she visits, it is also an opportunity for her youngest child, who often stays with her in Outapi, to play with Tk Shilongo's other grandchildren. In contrast, her oldest child has moved to Windhoek to Tk Shilongo's eldest daughter to attend early primary school.

[12] Pap is a porridge made from maize meal

Summary of Narrative Interview with Tate Hafeni (TA Representative), Meme Hafeni, and Tk Shilongo (at Tk Shilongo's homestead)

The joint interviews with Tate Hafeni, Meme Hafeni, and Tk Shilongo provide rich perspectives on the cultural significance of traditional spaces, the impacts of relocation, and the shortcomings of Namibia's compensation policies.

Meme Hafeni emphasised the enduring cultural role of specific homestead spaces. She described *Ondjuwo* as a place of protection and ritual: *"Ondjuwo is important, sometimes before embarking on a long journey it is where we say a prayer; apply some oils for good fortune and luck"* (Meme Hafeni, personal communication, May 16, 2022). She also highlighted *Oshoto* as a male space of wisdom and guidance: *"Traditionally they go straight to it without questions… it is meant for evening regroup with the elder… where all the males in the house share supper, stories and jokes"* (Meme Hafeni, personal communication, May 16, 2022).

Both Tate Hafeni and Tk Shilongo reflected on the difficulty of integrating these cultural forms into urbanised contexts. Tk Shilongo explained that *"the yard spaces are not accommodative of our traditional elements… we are forced to pick one or even if you have both, they tend to be at unsatisfactory standards"* (Tk Shilongo, personal communication, May 16, 2022). This inability to fully preserve homestead spatiality underlines the tension between traditional domestic forms and modern planning frameworks.

The participants also voiced strong concerns about the financial burdens imposed by relocation into townlands. Tk Shilongo criticised the rates and taxes that elderly residents are required to pay: *"You will find rates and taxes per month for some of these houses at N$ 5000, which is financially challenging and unjust on these retired and unemployed elderly"* (Tk Shilongo, personal communication, May 16, 2022). Tate Hafeni reinforced this point, arguing that the situation is unjust because *"these folks lived in their traditional homesteads for decades before local authorities decided to expand their boundaries. They had not requested to be included in urban land and its challenges"* (Tate Hafeni, personal communication, May 16, 2022).

The three participants expressed dissatisfaction with the top-down nature of the relocation process. While local authorities are required to consult traditional authorities, Tk Shilongo observed that *"conceptualization is carried out by town council, they just alert traditional authority"* (Tk Shilongo,

personal communication, May 16, 2022). Tate Hafeni went further, likening the current process to colonial-era practices: *"Top down approach that has been used before on black communities by colonial regime is what our own black government is using on its people"* (Tate Hafeni, personal communication, May 16, 2022).

Another recurring concern was the problem of inadequate compensation. Tate Hafeni explained that *"too many individuals… ended up with insufficient compensation"* and suggested that government valuators are conflicted: *"It will be fair if the government can outsource valuation skills elsewhere instead of using their own department because it ends in conflict of interest"* (Tate Hafeni, personal communication, May 16, 2022). Tk Shilongo recalled an example of a household compensated only N$ 20,000, which the owner refused as it could not cover the loss (Tk Shilongo, personal communication, May 16, 2022).

Despite these shortcomings, the participants acknowledged that there have been some policy revisions that slightly improved outcomes for communities, though they argued that genuine participation is still lacking. Tk Shilongo stressed: *"Community consultations should be a legal and compulsory procedure"* (Tk Shilongo, personal communication, May 16, 2022).

In conclusion, the reflections of Tate Hafeni, Meme Hafeni, and Tk Shilongo illustrate the layered impacts of relocation and urban expansion. Their narratives underscore the cultural importance of spaces like *Oshoto* and *Ondjuwo*, the financial and social burdens imposed by relocation, and the shortcomings of current compensation practices.

5.5.3 Case 2: The upgraded urban homestead – Persistent spatial logics.

Background to the homestead

Mk Iipinge's homestead is located in the proclaimed urban area of Outapi. Her homestead is home to 21 people, which includes family members and some extended family members, as well as one person who does domestic work for the homestead. Only about 7 people frequently live in the homestead, as the rest of the family all reside in Windhoek and other larger urban areas for work and school. As the homestead heads both had formal education and employment in their working years in Outapi, they have been able to send their children to universities. The family also previously operated a home-based shop with some produce brought in from the nearby larger urban area of Oshakati, as well as some produce from large gardens in which they once grew some fruits and vegetables. Mk Iipinge is originally from another area of Owamboland. She and her husband established their homestead in the area decades ago, after the land was allocated to them by the Traditional Authority. Mk Iipinge in her narrative also often shared how well-travelled and exposed her family members were due to the educational in the homestead, which had an impact on the homestead's domesticity and spatiality. The family would often host visitors through church and educational networks. The homestead has incorporated many advanced infrastructural elements such as a small concrete water reservoir and flood lights which light up the open spaces in the homestead throughout the night. Most of these material developments were executed long before the incorporation of the homestead into the urban boundary.

The architecture of the homestead

The entire homestead has been completely rebuilt with modern materials over the years, and their age shows that they were not built recently in order to upgrade the homestead to the urban standard, rather, the homestead's buildings have been modernised over many years because the homestead heads have been formally employed in professional careers throughout their working lives. Unlike the other homesteads which also incorporate many vernacular architectural elements or spaces, the homestead is mostly modern in its architecture, with very few elements of vernacular quality. All walls are made of cement brick and other masonry construction, with smooth plaster and paint. The roof is made of timber construction and corrugated metal sheets laid at a gentle fall. Figure 36 below illustrates the site plan of the homestead. The spatial layout is largely open as shown in Figure 41 below, with large spaces in between all the different structures which share spatial relationships based on use. For example: the

rooms for male residents and those which would be occupied by labourers and generally younger members of the family in different instances are all located closest to the vehicular entrance and the space currently used as a makeshift oshoto space. The structure which houses Memekulu's bedroom, living room, and a small kitchen used for simple meals like breakfast tea and biscuits for guests is located next to the *epata*, further from the entrance, and includes elements for privacy such as a veranda enclosed on one side (that which faces the closest adjacent habitable structure) with partitions made of wooden poles and cladded in corrugated metal sheets. The additional structures in the homestead include *epata,* which is built up of a covered outside space built with sticks and cladded with corrugated metal sheets. Smaller enclosed brick structures provide the storage rooms for the *epata*, which is accessorised with hanging utensils such as *oluko*[13], *etapo*[14], and metal pots used for cooking. The more expensive cutlery and other utensils are kept in the structure housing Memekulu's living space and small kitchenette. The living space in Memekulu's structure is elaborately decorated with family portraits showing off important life events in the family's history, and can be mistaken for a living room in a typical modern urban home. Sofas line the interior walls creating a comfortable lounging space adjacent to the kitchenette where simple meals and drinks can be prepared for Memekulu and her guests.

[13] *Oluko* is a type of large wooden spatula.

[14] *Etapo* is a dry gourd worked into a container used to drink water.

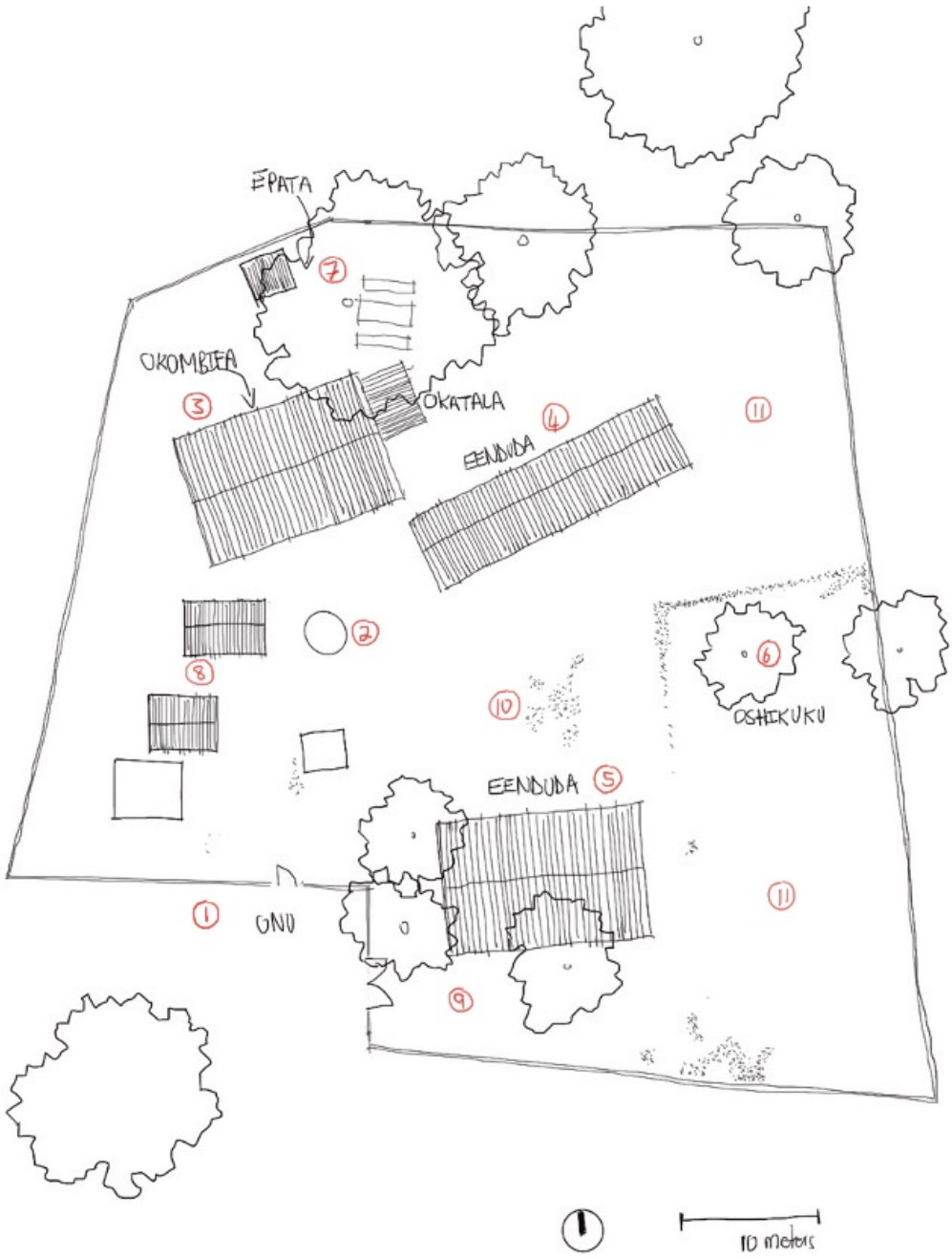

Figure 40: Schematic spatial setup of the homestead

Legend for Figure 41:

1. Entrance
2. Old decommissioned water reservoir
3. Building housing Mk Iipinge's bedroom, living room and small kitchen
4. Sleeping rooms for girls
5. Sleeping rooms for boys

6. Chicken coop
7. Outdoor food preparation area with seating (*epata*)
8. Storage rooms
9. Car parking area
10. Reception (*oshoto*) space
11. Large open spaces in the homestead (*ehale*)

Everyday life and domesticity of the homestead

Throughout the day, the homestead is primarily occupied by younger extended family members who are not currently attending any school, and Memekulu who is the homestead head. Other family members are occupied with school and work activities during the day, leaving the homestead generally unoccupied with very little activity throughout the daytime. Every now and then, a neighbour or visitor passed by briefly, proceeding through the entrance, and to the central open area of the house before someone in the homestead receives them to find out the purpose of their visit which is often to deliver a message; collect and deliver a parcel; or to discuss a brief matter.

During the day, interviews with Memekulu were often conducted under the shade of the veranda next to the structure housing her bedroom and private living spaces. The homestead does not have a dedicated *oshoto* space which is usually semi-enclosed by a circular wall built with a palisade of sticks or enclosed with a wall of corrugated metal sheets cladded on wooden sticks. Memekulu remarked that the veranda we sat in at the front of the structure housing her bedroom and living space served the same purpose as *oshoto* (sketch shown in Figure 42, and in the detailed drawing on Figure 43 below), particularly because it was where we were having the discussions about the research. This contrasted the form and spatiality of a typical oshoto in other homesteads in the area which would be relatively autonomous (detached from any other spaces), and usually centrally located in the homestead to ensure privacy for conversations the men or guests would have. It is also common for homesteads in the area to have more than one oshoto, with one usually for guests, and the other for the residents. Memekulu commented on this aspect of the spatial makeup and domesticity of her homestead, referring to it as "lacking" an important customary element in the interview transcript below:

> *Memekulu Iipinge: …"Because as you enter a typical traditional household, it was a respected norm for men to sit and talk at Oshoto while women are at Epata (kitchen area). This way of life was important and both genders had different beneficial values instilled in them in these different*

areas of the house. These days those practices hardly exist, we have smaller areas in our houses that attempt to emulate but they do not really suffice."

Memekulu Iipinge: "these days when you want to have an important conversation with young men in the house you gather them where you can separately from the young women. The same method applies in the events of wanting to talk to the young women."

Due to her old age and reduced mobility, she did not move around very often. The young girls (some of whom are her grandchildren and others who are children of extended family members) generally stayed close by to her throughout the day to assist her with daily tasks. Every now and then the younger occupants in the homestead may pass by close enough for Memekulu to demand an explanation as to why they needed to hear what was being discussed, an interaction which would be resolved in a humorous and light-hearted manner.

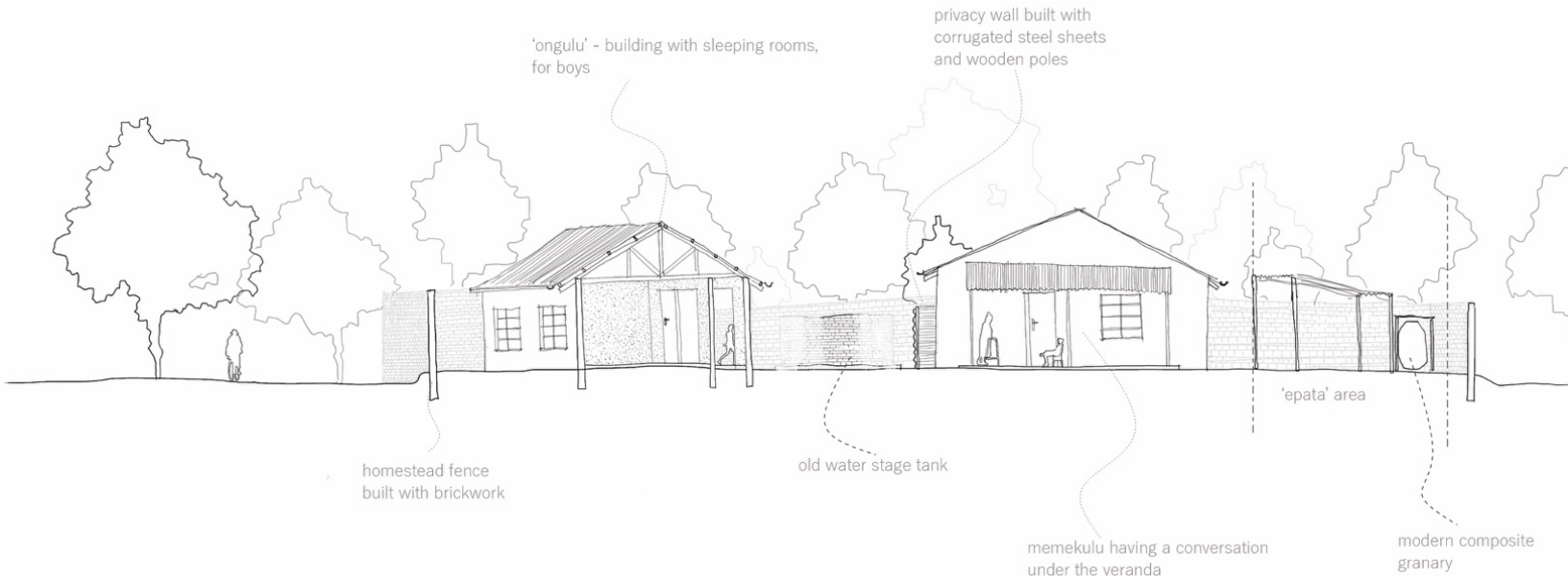

Figure 41: Section through Mk Iipinge's homestead on urban land, not to scale. Source: Author

Memekulu described how the very veranda where they often had their conversations was initially built as a small home shop and bakery many years ago when she was younger and when her late husband was still alive. She explained how the family made and sold bread and other consumables from the home shop, and how this activity also led to some spatial and material changes to the homestead by adding hard

furniture such as concrete benches and tables with tiled surfaces for her customers. She also recalled how many years ago her son often told her about the newly built houses within the smaller urban boundary of Outapi, how they were constructed, what they looked like, and how this inspired them to enlarge the overall size of the homestead and to use different materials in its construction. The colours used on the structures resembled those seen in some buildings in town. Memekulu highlighted how the tiled concrete benches and tables were very useful during ceremonies held at the homestead, as people could place food on these surfaces and sit on them. Memekulu described her understanding of a homestead as a private space, serving the family first.

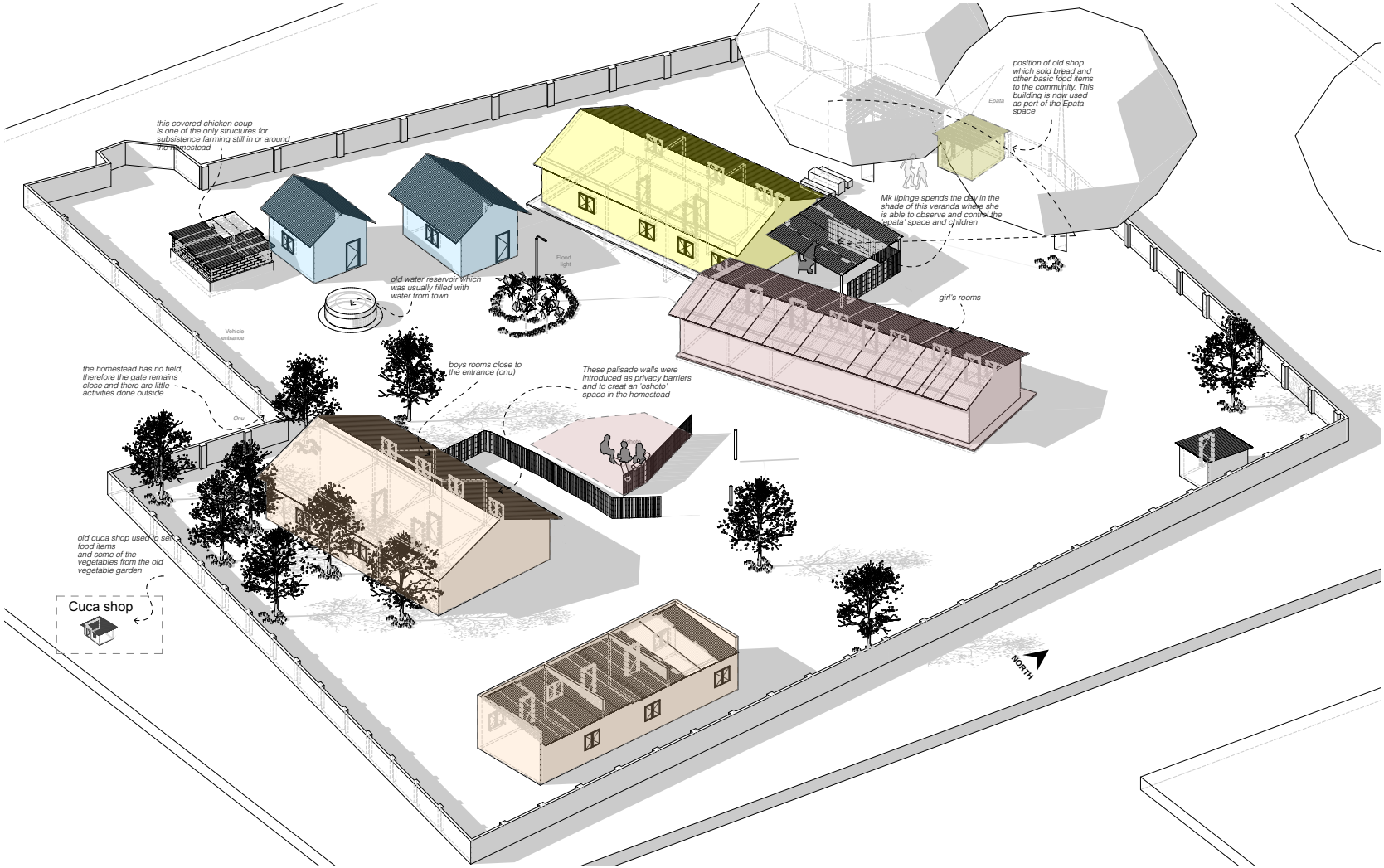

Figure 42: Detailed drawing of Mk Iipinge's homestead on proclaimed urban land with spatial references. Source: Author

Summary of Narrative Interview with Mk Iipinge

The interview with Mk Iipinge reflects on the cultural significance of spaces such as *Oshoto* and *Ondjuwo* and their role in shaping community life. She explained that *"as you enter a typical traditional household, it was a respected norm for men to sit and talk at Oshoto while women are at Epata (kitchen area). This way of life was important… These days those practices hardly exist, we have smaller areas in our houses that attempt to emulate but they do not really suffice"* (Mk Iipinge, personal communication, February 4, 2023). While recognising the importance of such spaces, she admitted that certain traditional features such as the *ondjuwo* (the ondjuwo space was typically a hut in which the woman would sleep and childbirth rituals would take place) can be left behind: *"To be honest, that bit of traditional housing is something I can do without"* (Mk Iipinge, personal communication, February 4, 2023).

Her reflections highlight the differences between communal and urban life, especially the social bonds formed in villages compared to towns. *"The village is completely different from town… your neighbour in town can and is usually somebody who speaks a different dialect from yours"* (Mk Iipinge, personal communication, February 4, 2023). She described how, in communal areas, kinship and cultural ties created networks of support, which extended to livelihoods: *"Sometimes we house those that aren't related to us by blood… This would usually benefit the house as it means it's a lot of hands in the Mahangu field and you tend to yield more food"* (Mk Iipinge, personal communication, February 4, 2023). These reciprocal practices, she explained, have weakened in urban settings, contributing to the erosion of social capital.

Mk Iipinge also addressed the loss of **subsistence** farming activities that sustained communal livelihoods. She observed: *"When we got here… each house had livestock which was sort of compulsory, we had Mahangu fields… Nowadays we do not have Mahangu fields or livestock"* (Mk Iipinge, personal communication, February 4, 2023). While she personally adapted to the changes, she expressed concern for her neighbours who were more severely affected: *"I feel bad for them because their livelihoods are negatively impacted more than us. I am lucky because I still survive on my pension. What made me feel bad the most is the fact that I had to give up my very fruitful garden, I worked hard and harvested more than enough for my house"* (Mk Iipinge, personal communication, February 4, 2023).

Despite these challenges, Mk Iipinge adopts a pragmatic stance on urbanisation: *"I personally do not feel that bad about the changes. It is a part of life and changes will happen, we do not expect things to stay the same be it positive or negative"* (Mk Iipinge, personal communication, February 4, 2023). She recognises that while traditional elements remain valuable, societal evolution is inevitable, and adaptation is necessary.

Finally, she noted architectural distinctions across Oshiwambo regions, observing that modern houses often lack cultural spaces that once defined homesteads: *"Yes there is a distinction definitely… some houses do not have cultural spaces such as Oshini"* (Mk Iipinge, personal communication, February 4, 2023). These observations underscore the cultural and architectural shifts brought about by urban development.

In conclusion, Mk Iipinge's reflections reveal the tension between preserving tradition and adapting to modernisation. While she acknowledges the irreplaceable value of cultural practices such as Oshoto, she also accepts that not all aspects of traditional domesticity can or should be preserved. Her narrative illustrates the need for a balanced approach to development that both respects heritage and accommodates change.

5.5.4 Case 3: The urban homestead as a case for alternative urban livelihood strategies, Outapi.

Background to the homestead

Meme Frieda stays with her children and grandchildren in the Outapi town area. She is the head of her homestead, after her husband passed away many years ago. Her homestead is completely incorporated into the modern urban fabric, and detached housing units on separate erven divided by short steel fences and accessed by new streets sprawl on what used to be her crop field just 10 years ago. She has decided to receive compensation for her crop field, and upgrade her homestead to the urban standard as per the urban planning by-laws. All her immediate neighbours have relocated to other areas of communal land to continue their housing and subsistence farming activities. Her homestead sits awkwardly placed against the grain of the roughly orthogonal grid of the erven layout of Outapi. Her homestead has undergone much material transformation as all the old vernacular style structures which were made of mud blocks and thatch roofs, as well as wooden sticks have been replaced with a higher standard of cement brick walls, corrugated metal sheets and steel windows (see front elevation of homestead in Figure 45). Previously, only the main structure (ongulu) comprising two bedrooms, a living room and a storage room in which she and her husband lived, and a few other small structures were built to this standard. Although her homestead is completely modern at the material level, the wedding of the eldest daughter the previous year caused the reintroduction of spatial elements necessary for a customary ceremony such as a wedding to be held. Meme Frieda lives with her children and grandchildren in the homestead. She made the decision to stay in the newly proclaimed urban boundary, and has been compensated for her crop field which has been annexed into the townland. As a result, she has been compensated for her land at a square metre rate, and her trees and any other improvements she had made to the area around her homestead on which she had been allocated land rights by the traditional authority. In addition, as per the compensation for communal land guidelines, she has also been compensated with an additional erf adjacent to her existing homestead, both of which have been limited to 500sqm. Her homestead is therefore a part of the urban area, and is also connected to all services such as water, electricity and sewer.

Everyday life and domesticity of the homestead

Meme Frieda is retired, and relies on her pension. She also receives financial support from her eldest daughter who is formally employed in Windhoek. She starts the morning ensuring everyone in the homestead has had breakfast, usually tea with bread, or the leftover dinner. This is followed by some

cleaning activities, after which she will start preparing lunch with the younger women in the homestead when they are around. Meme Frieda's homestead has always been close to the town proper (about 500m), and thus, even before the newly proclaimed townland, much of the daily lives and livelihoods of those in the homestead would revolve around the opportunities presented by the town. Meme Frieda sold various fruits and other goods in town, some of which she still does today.

Particularly when there is a wedding or another customary ceremony, some families require gifts from the groom's family, which are usually items such as hoes, axes, and bows (useful and valuable tools which one would need to live and work in a communal land homestead), and other locally crafted tools such as Ondimbo[15] are presented to the bride's family at the oshoto space. Those items such as food and condiments[16] placed in woven baskets are allowed to go beyond the oshoto space to the epata space. Recently, store-bought condiments such as tea, cooking oil, and sugar have become more common to include in the gifts. The male head of the homestead and other male elders in the homestead would then walk out to the oshoto to receive the male guests, whereas the woman head of the homestead would receive the female guests at the epata space. If the gift is significant like a cow, it may stay outside under a tree tended to by any of the younger residents in the homestead, until the heads of the homestead walk out to receive it. Once the homestead heads have accepted the gift, it would be taken to the kraal. The other gifts of tools given to the homestead heads, after being accepted at the oshoto space, will then be taken by the visitors to the ondjuwo space, unwrapped and laid on the ground at the entrance to the ondjuwo space. This ritual is done at the ondjuwo space because it is where the childbirths take place, a sacred place within the homestead, and in the case of a wedding, it is the place where the bride was born. The guests will then be invited to sit, and will be served with food at the *okashotona* (a smaller oshoto space connected to the entrance of the ondjuwo space).

Vignette 3

> *In the early afternoon at about 3pm, I sat with Meme Frieda as we have a few times before to have some conversations about my research. Meme Frieda is sat in her plastic chair positioned in*

[15] Wooden stick with a knob on one end similar to a cane and used for various purposes

[16] These items are usually dependant on season. In August to November, which is the dry season, it would comprise foods such as dried beans and spinach, whereas in May and June would comprise foods such as fresh corn, beans and ground nuts as it is the harvesting season.

the shade of one of her trees close to one of the small storage rooms built with corrugated metal sheets to store dry food items during a family wedding. There is not much activity happening in the homestead. Meme Frieda has just arrived from her visit to a relative's homestead a few km away, and the boys sat in the tree outside the homestead passing the afternoon's heat, after returning from errands in town. A few minutes into our conversation, the boys walk in from outside and announce that there is a visitor entering the house, and behind them, a lady walks from around the corrugated metal wall inside the house and cheerfully greets Meme Frieda. They seemingly pick up on an already ongoing conversation. They are very cheerful and the lady turns to me to greet me; Meme Frieda disrupts my introduction of myself to the lady, telling her my name and letting her know about my research and why it is important because the lady is also affected. Meme Frieda then gives her the key to one of her storage rooms in which she can collect oshikwiila[17] *and introduces the lady as an old resident of her neighbour's homestead, Tatekulu Shipoke, who had now passed on a few years after receiving compensation and relocating to another area of communal land. She points to the direction of Tatekulu Shipoke's house, which is now in ruins and expresses how deeply saddened she is by the fate of those homesteads which had relocated to other areas of communal land.*

This vignette shows the strong sense of community which existed and still exists today between the residents who stay in homesteads in close proximity, and particularly how they may share resources when able to. The neighbourly relationship between residents allows people access to other homesteads as an extension of their own, and particularly in this case, where the visitor was a woman and customary practice allowed her to enter all the way to the epata space. Furthermore, there is a consensus between Meme Frieda and her guest about the impact of urban development and the compensation guidelines on residents who have relocated to other areas of communal land. The lady who had visited her to collect *oshikwiila* had opted to relocate to another homestead nearby in order to continue staying close to town.

Vignette 4

Meme Frieda and I are sitting under the marula trees after I have arrived at her homestead in the early afternoon. It is a hot afternoon although a small breeze provides some relief. We are seated in one of her usual seating spaces in front of a corrugated metal shack used as a storage room, which is a few metres away from the epata space. The homestead is quiet with little activity and

[17] Oshikwiila is a bread made from mahangu (millet) flour.

the only thing one hears against our conversation is the sound of the leaves and the crying sound of a small baby being tended to in one of the buildings. Two of the young boys who reside with her walk past us with plastic bags and greet us. As they proceed to walk to a space with an empty table next to the epata space, they begin to unpack food items comprising small Vienna sausages and brochens bought in town. They unpack these carefully, placing them onto plates and one of the boys begins to cut the broches in half and places them back onto the plate. One of the boys walks into the semi-enclosed covered storage space of the epata space to look for something they were missing. There was no conversation between the boys, seemingly paying respect to my presence and the fact that Meme Frieda and I were already in conversation close by. I asked Meme what the boys were doing and she described to me how they often made hotdogs to sell in town at the shopping complex which is about a 7-minute walk. I watched the boys prepare the hotdogs, constantly moving up and down in between the spaces around the epata space.

This vignette shows the daily efforts of residents in homesteads to take advantage of the opportunities presented by being close to town with the economic activity happening. Many of these practices change the way the use of space by certain residents in the homestead is perceived. It is not uncommon to be told that boys should not be at the *epata* space, however in this instance as an example, Meme Frieda seems accepting and not particularly bothered by the use of the space and tools by the boys. This continues to situate the homestead central to livelihood strategies even across different generational groups within the homestead, and even the customary use of space shifting to accommodate this change. Meme Frieda is unhappy about what she feels they have lost in terms of cultural practice, particularly relating to the homestead, the spaces, its domesticity relating to customary practices such as weddings. She expressed the importance of the *oshoto* as the essential meeting space for when people want to have conversations about reparations, or to begin talks about a wedding amongst other significant matters. She also expressed the importance of the *ondjuwo* as a sacred place for women, particularly a woman who has recently given birth. The *oshini* is another place which she feels is significant and has been lost as it cannot be recreated in an enclosed hut to serve the function intended.

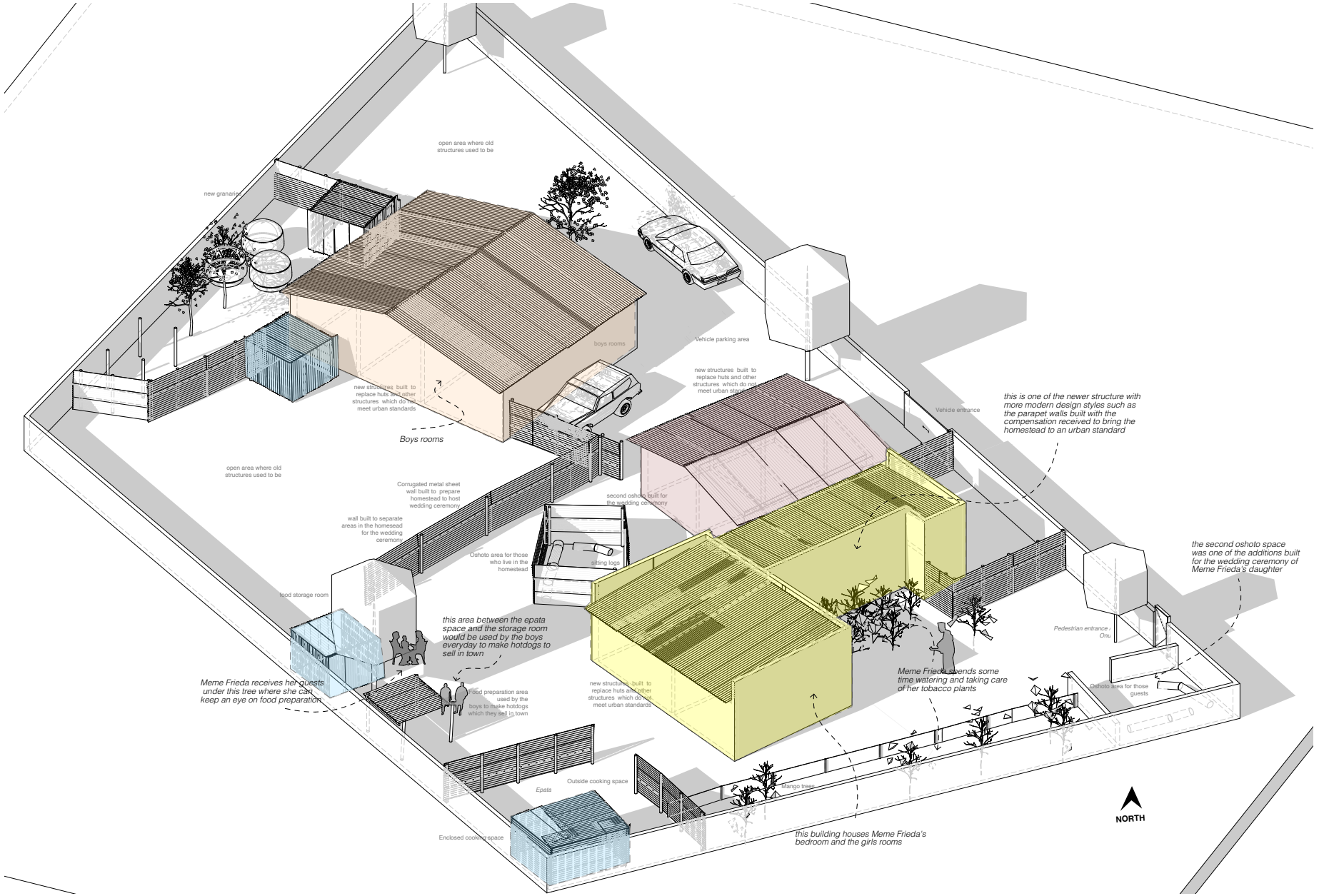

Figure 43: Detailed drawing of Meme Frieda's homestead on urban land with spatial reference notes. Source: Author

Summary of Narrative Interview with Meme Frieda

The interview with Meme Frieda highlights the cultural and societal transformations experienced in Outapi as a result of urban development and relocation policies. She situates her narrative in the history of Outapi, explaining that *"Outapi is attached to a well-known village called Oshihenye… I was born and grew up here, I got married and stayed here until my husband passed on"* (Meme Frieda, personal communication, June 28, 2022). She recalls how relocation began in the mid-1990s and how residents were initially offered N$ 5,000 per household, later increased to N$ 7,080. For her, these sums were wholly inadequate: *"I was in total disagreement with those fees because our houses are worth so much more"* (Meme Frieda, personal communication, June 28, 2022).

Central to her reflections is the loss of customary spaces such as *Oshoto* and *Ondjuwo*. She explains that *"Oshoto is such a significant area of a house, for wedding procedures, for traditional courts as well as important aristocratic guests. Ondjuwo is also crucial… newborn babies need to have ceremonial procedures in Ondjuwo, brides must come from it before weddings begin"* (Meme Frieda, personal communication, June 28, 2022). The erosion of these spaces represents, in her view, the erosion of cultural continuity: *"To be frank, these are all important elements and when my kids are getting married I feel they are genuinely robbed of these incredible experiences"* (Meme Frieda, personal communication, June 28, 2022).

She also reflects on the everyday practices lost due to modernisation and upgrading: *"I have epata (a kitchen) but it is not to my satisfaction… to brew oshikundu one must use a bucket instead of oshuma (clay pot) because we have nowhere to place it"* (Meme Frieda, personal communication, June 28, 2022). She laments the decline of pottery-making and bartering systems that once sustained local exchange: *"Growing up, my mom used to create [clay pots]… we would have a bartering system of exchanging pots for salt and it was a mutually beneficial trade that worked for our people for decades"* (Meme Frieda, personal communication, June 28, 2022).

Meme Frieda also discusses the restrictions on land use imposed by urban standards, including the prohibition on home gardens: *"It is impossible and I cannot do it… because it is not allowed"* (Meme Frieda, personal communication, June 28, 2022). Attempts to build a kraal for livestock were also rejected by the local authority, despite her household having been gifted a substantial herd of cattle, goats, and

sheep. These restrictions, combined with insufficient compensation, have undermined the agrarian practices that once sustained homesteads.

The social consequences of relocation are equally pronounced. She observes that *"never mind this situation led to stress-related deaths in so many of my old friends, may their souls rest in peace"* (Meme Frieda, personal communication, June 28, 2022). For her, the breakdown of neighbourly ties and cultural networks has eroded social cohesion and community resilience.

Despite these pressures, Meme Frieda chose not to relocate completely, preferring instead to upgrade her homestead to the urban standard: *"I was born here, I got married and I birthed my children here. This is all I have ever known and it is my life… I saw what was happening to my peers when they moved, the health issues developed due to stress"* (Meme Frieda, personal communication, June 28, 2022). Her attachment to place, along with practical considerations such as schools and hospitals nearby, reinforced her decision.

In conclusion, Meme Frieda voices hope that future planning will better integrate customary elements into urban standards: *"If we could attain government consensus to integrate our urban houses up to local authority standards with our traditional elements, things will be so much better"* (Meme Frieda, personal communication, June 28, 2022). Her testimony underscores the cultural costs of relocation and the need for planning frameworks that recognise the enduring significance of traditional spatial practices.

5.5.5 Case 4: The Reestablished Homestead on other Communal Land – Post compensation and relocation

Before the full re-establishment of her new homestead close to Outapi, Meme Rosalia's homestead was located in an area of the proclaimed of Outapi. In her old homestead, Meme Rosalia lived with her siblings in her parents' homestead, together with their children, other extended family members, and labourers. The homestead maintained a maize field and kraal, and also relied on the incomes of those in the homestead who were formally and informally employed, including Meme Rosalia. Their homestead included a combination of vernacular structures such as huts, cement block buildings, and a palisade of wooden sticks. After the proclamation process, her old area was incorporated as part of the Outapi town expansion and the homesteads were served with moratoriums on new building structures, Meme Rosalia's homestead opted to relocate, with her and her siblings all moving to different areas, as her parents were no longer alive. Her old area which has been proclaimed is now occupied by informal shacks. Her new homestead has since been established in a small village called Omfitu Wanauyala, about 3 km north of the new town boundary.

This homestead is accessed close to the main road, in an area which has also started to experience an increase of informal *cuca shop* structures frequented by local people from the area. A vehicular passage leads from the main road, meanders through alongside *cuca shops* and subsequently leads from the main gate through the fence surrounding the field, to the main vehicular entrance of the homestead. The spatial structure of the homestead is simple and open, with only the essential spaces recreated by the homestead head, which are the separate bedrooms for the homestead head and her family, *epata*, and *oshoto*. The entire boundary of the homestead is constructed of wooden poles and cladded with corrugated metal sheets as shown in Figure 45 below. There are only two built-up structures in the homestead, one of which is positioned relatively centrally to the boundary of the homestead; the structure houses the main living room, kitchen and bedrooms, occupied by the homestead head. It is a simple rectangular layout constructed with plastered and painted cement bricks, and a corrugated metal sheet roof supported by wooden rafters. Loose bricks and other heavy miscellaneous items such as tyres are placed onto the roof to prevent it from being blown off by the wind. One door at the front of this structure leads to the open plan living room and kitchen, which are functionally furnished with sofas, coffee tables and a stove. A short corridor leads to two bedrooms, one of which belongs to the homestead head. At the front of the structure is a veranda furnished with chairs and a radio. This space is used by the homestead head to

receive guests and to sit in and pass by the afternoon sun when there is no work to do. The veranda faces the large open area at the centre of the homestead. Behind it, there are semi-enclosed structures built with wooden poles and cladded with corrugated metal sheets. These are used as the *epata* and include the cooking and food storage, and dish washing spaces. The other fully built-up structure in the homestead is a similarly constructed building with a few rooms adjacent to one another with each room accessed privately from the outside. This structure is used by the young male residents as shared bedrooms. This structure's privacy is reinforced by a detached wall built of wooden poles and corrugated metal sheet, about 1.5m high and obscures the doors to the individual rooms from the view from the central open area in the homestead.

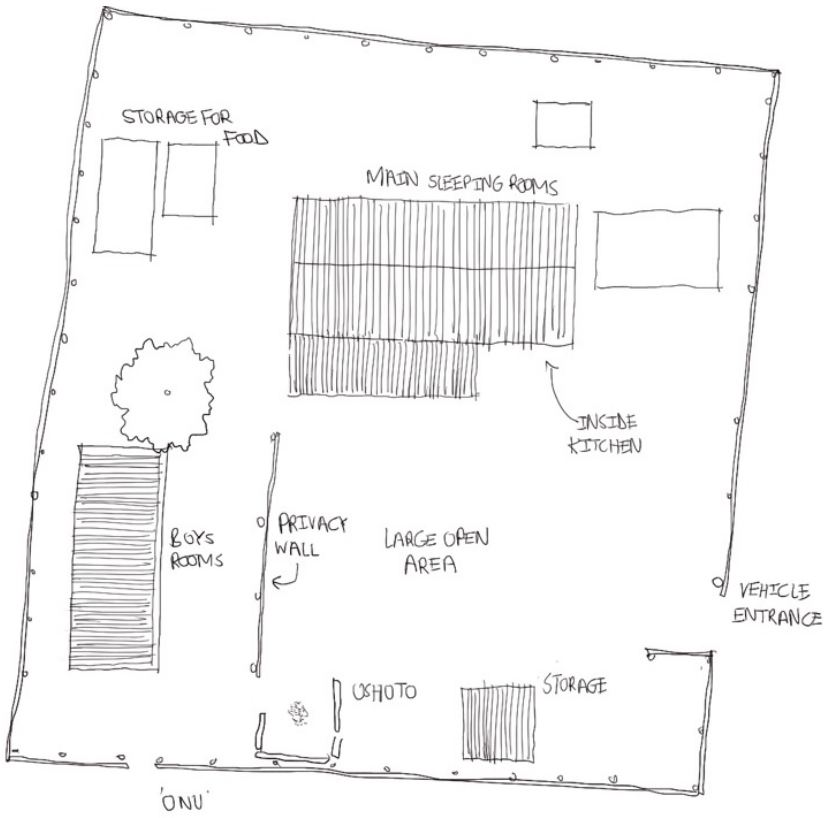

Figure 44: Schematic spatial layout of Meme Rosaria's reestablished homestead on communal land



Figure 45: The kraal used by the reestablished homestead to keep goats and sheep for subsistence farming.



Figure 46: The perimeter wall of the reestablished homestead constructed with corrugated metal sheets



Figure 47: A view out of the reestablished homestead (right), with the cuca shops and some informal housing in the distance.



Figure 48: The veranda leading into the head of the homestead's room in the reestablished homestead

The homestead head often described and referenced the process involved in reestablishing her homestead, and the challenges thereof. Her main concern was the low compensation amounts as being part of the early homesteads to be compensated for their communal lands, for which families were compensated amounts as low as N$10,000. She was also frustrated at the fact that specific policies enacted at the time further led to challenges with regard to how much land the homesteads were awarded by the headmen, particularly the restrictions on the cutting down of trees, which means that not enough land could be cleared, resulting in smaller homesteads that could not accommodate all their spatial needs.

The days spent visiting this homestead and observing were relatively inactive. It is important to note that the period of the research was during a time immediately after the poor harvest due to the poor rain. The young boys in the homestead occupied themselves with other activities outside of the homestead such as visiting friends, the cuca shops close by, and doing small jobs and tasks in town (Outapi). A young female resident who is the niece of the homestead head with a toddler and an older child spent much of the days at home, taking on many of the domestic tasks while taking care of her toddler, who often played around in the veranda and the large open space in the homestead. The head of the homestead attributed the lack of spatial complexity and the absence of customary spaces such as the *ondjuwo* and corridors to create thresholds and privacy (*omikala*) to needing more motivation due to a lack of financial resources and the same family setup required. She did not, however, see the town's growth as a negative thing and often

described its benefits, such as the employment opportunities afforded to many people who reside in the homesteads in the surrounding communal lands.

The homestead relies on subsistence farming. It is surrounded by a large maize field, which the family works each year to produce maize. The family also keeps a few cattle and a few pigs. Many of the cattle were lost during the severe drought in 2019. A few chickens are also kept roaming in the homestead and are usually killed and prepared for food for guests. The homestead head is retired and would spend the days visiting close relatives and going to town. When at home, she often tended to the toddlers, sharing the tasks of cleaning, washing the children and helping make the food with her niece. She often described her dissatisfaction with the low tolerance for customary spatial practices within the town's urban boundary. She did not like that people would have to imitate spaces like *oshoto* with conventionally built verandas.

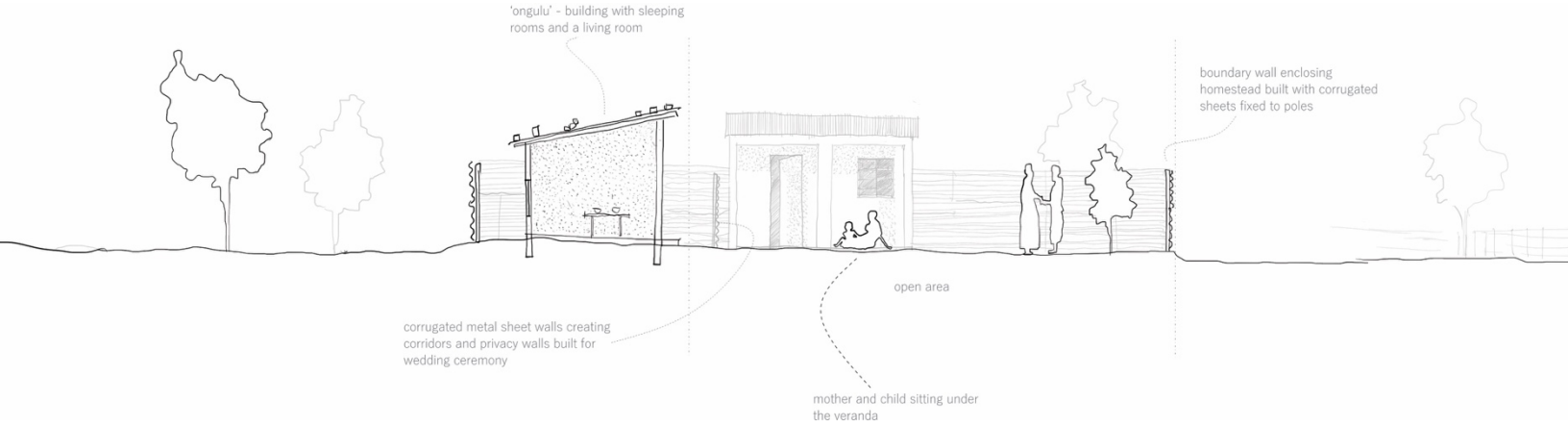

Figure 49: section through Meme Rosaria's homestead on communal land, not to scale. Source: Author



Figure 50: Sketch from memory by a resident in a reestablished homestead showing the layout of the homestead before it was relocated to another area of communal land

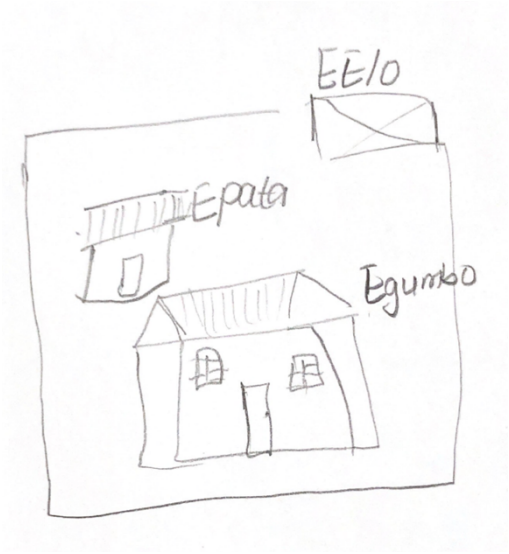

Figure 51: Sketch by the same resident as Figure 55 showing the layout of the homestead as it is now after being reestablished in another area of communal land.

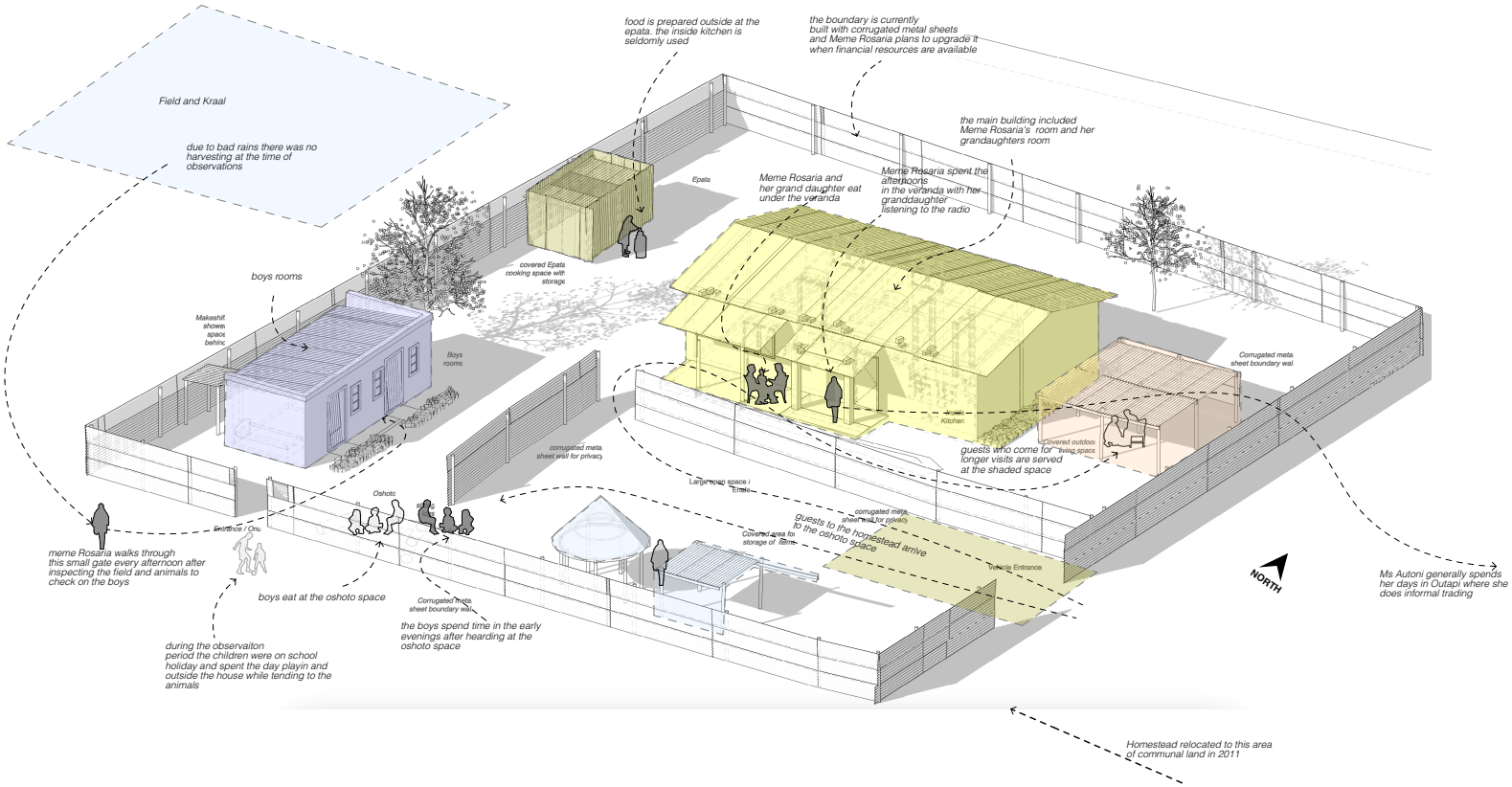

Figure 52: Detailed drawing of Meme Rosaria's homestead on urban land with spatial reference notes. Source: Author

Summary of Narrative Interview with Meme Rosaria

The interview with Meme Rosaria provides insight into the effects of urban expansion and relocation on Oshiwambo traditions, family structures, and social cohesion. She begins by recounting her family's relocation journey, emphasising the emotional and cultural disruption caused by leaving their ancestral home: *"We had a Mahangu field then, we lived and prospered so much more… Life is not as it used to be, there are some changes"* (Meme Rosaria, personal communication, June 18, 2022). Although her family was fortunate to know a few people in the new settlement, she recalls that *"of course we had issues adopting… it was a gradual process… we had to build social relations and connections slowly"* (Meme Rosaria, personal communication, June 18, 2022).

A recurring theme in her narrative is the erosion of cultural practices and community interactions. She reflects that *"nowadays kids cannot play over at a neighbour's house… or the absence of an old norm where a young woman would spend the evening over at a neighbour's house… all those cultural practices are in the past"* (Meme Rosaria, personal communication, June 18, 2022). This gradual disappearance of collective domestic practices is linked both to relocation and broader lifestyle changes over time.

One of the most profound consequences of relocation was the loss of agricultural land. Meme Rosaria notes that *"life is also sort of difficult because the Mahangu fields are not attached to our houses anymore… the field is now located in another village."* (Meme Rosaria, personal communication, June 21, 2022). The distance made it expensive and impractical to sustain subsistence farming, undermining both livelihoods and the cultural importance of agriculture to household identity.

She also expresses dissatisfaction with the pace of urbanisation, arguing that development is advancing too quickly and without adequate consideration of cultural values: *"I do not agree with the pace at which urbanisation is happening… it is stripping away important traditional values, norms and practices"* (Meme Rosaria, personal communication, June 21, 2022). Her critique extends to the compensation process, which she views as unfair and inadequate: *"We are just as equally important… what about the unfair loss of our subsistence agriculture and livelihood? Our animals died, we lost land for crops… I am in total contention with this compensation/relocation because it is a disservice to our traditional way of life"* (Meme Rosaria, personal communication, June 21, 2022).

Another critical issue highlighted in her reflections is the lack of communication and transparency during the relocation process. She explains: *"We, the communities lacked understanding… we were informed that*

it was for 'development' and that was it. We only came to realize later after the impacts when it was too late" (Meme Rosaria, personal communication, June 18, 2022). This lack of consultation left many families feeling powerless, fearful, and ultimately regretful of their decisions.

Finally, Meme Rosaria comments on the broader social consequences of dispersal. She recalls that *"even if there is an event, something like a wedding, your old friends will mostly find it difficult to find your new village and that neighbourly help is no more there"* (Meme Rosaria, personal communication, June 18, 2022). The relocation fragmented community networks, weakening support systems that once underpinned ceremonies, livelihoods, and everyday life.

In conclusion, Meme Rosaria's reflections underscore the cultural, economic, and social costs of relocation. She calls for a more inclusive and transparent approach, suggesting that future developments must begin with proper consultation: *"They must know that this compensation process and relocation is more negative than it is positive… our situation should lead as an example to those that will embark on the relocation journey that it is difficult"* (Meme Rosaria, personal communication, June 21, 2022).

5.5.6 Case 5: The Homestead as access to land and housing markets

Ndina's homestead is located just south of Outapi. Her homestead has also been included in the newly proclaimed urban area. However, the area in which her homestead is located has not been reblocked yet, although moratoriums have been issued to stop the construction of more structures in the homesteads. Ndina is the head of the homestead, which she shares with three other siblings (two brothers and a sister) between the ages of 30 and 40. One of her brothers is self-employed in Outapi, and her other brother is employed and lives in the capital city, Windhoek. Her sister is employed in Outapi. Ndina's younger brother and sister live on the homestead, and they hired one person to tend to the house and the maize field. Although Ndina does not live in Outapi, she was selected as the head of the homestead after her mother passed away on the basis that she was the eldest of the siblings and also the most financially stable member of the homestead at the time, with an education and total employment in Windhoek. This decision was made by the other elders in the family and extended family through discussions facilitated by the local TA headman at the time of her mother's passing.

Due to the passing of both heads of the homestead, it has experienced a period of very little maintenance and has found itself in a derelict state. The boundary is still constructed from wooden sticks in the form of a palisade, and the rest of the structures are built with cement bricks, cement plaster, and corrugated metal sheet roofs.

Ndina has recently (within the last four years) embarked on a project with her siblings to refurbish and add to the structures in the homestead. This is partly because the homestead has reached a more dilapidated level and because the inclusion of the homestead in the town's boundary has caused some anxiety amongst Ndina and her siblings about their communal land rights and the value they may receive for the improvements to their homestead, should they decide to relocate the homestead to another area of communal land. The recent addition to the homestead is a cement brick and plaster structure with a corrugated metal roof and modern finishes comprising tiles, paint and ceiling boards (shown in Figure 60). The structure will house Ndina and her husband's bedroom, a living room and kitchen, a shared bathroom which can be accessed from the outside for the rest of the residents in the homestead, and an additional bedroom for their children. There is an expectation and agreement in principle that both her brother and sister will build extra structures to complete the construction of the homestead once they are in a better financial position to do so, within a master plan for the homestead which best aligns with the customary set-up.

Although the homestead is not connected to any services such as water or electricity, Ndina intended for the structures to all be built with provision and fitting, which allow for the easy connection to municipal services when the area is reblocked, and essential services are introduced into the area. In anticipation of the introduction of roads and other services, the loss of crop fields, and the construction of neighbouring private residential developments, Ndina also included the construction of a boundary wall in the initial scope of work and her budgeting. Other decisions were made based on the word-of-mouth information provided by others who have already been compensated for items that would affect the valuation of improvements to the homestead in a positive way as per the compensation guidelines, such as aluminium windows over steel options.

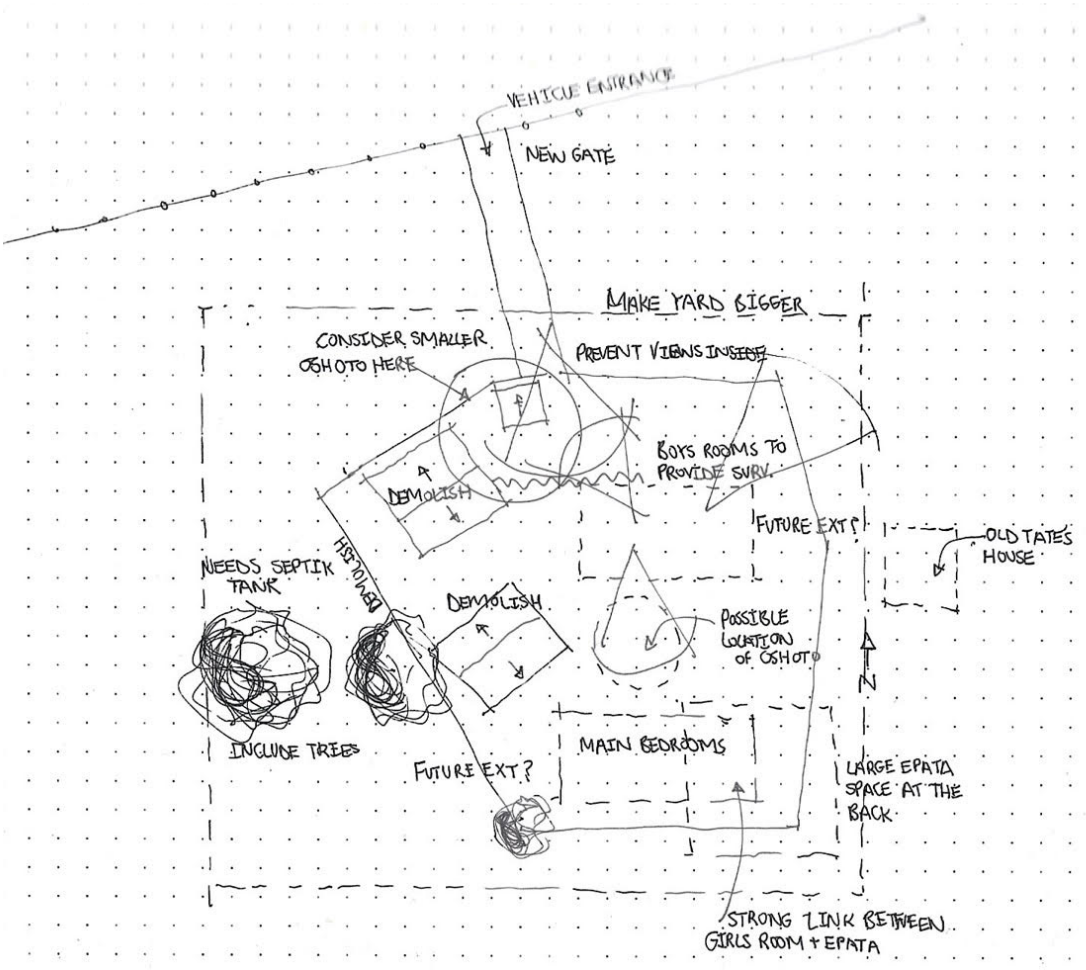

Figure 53: Early concept sketch outlining and recording some of Ndina's intentions with her homestead. Source: Author

Ndina's brief looked to take advantage of the maximum allocated area currently awarded to the homestead by the traditional authority, by expanding its perimeter. This will ensure that maximum compensation is received if the homestead decides to relocate, or in the case that she stays in the urban area, it is awarded the maximum land available. Other strategies also included incorporating existing trees which were outside of the homestead's perimeter into the new perimeter enclosed with a boundary wall. In terms of the spatial layout, the entrance of the homestead is maintained at from and along a north-south axis, which is planned to lead to the epata space which is positioned in the southeast corner of the homestead, making it the most private area. Ndina wanted the homestead to include two *oshoto* spaces, one close to the entrance, and another as the central space in the homestead, to which both the boys' rooms, and the girls' rooms (housed in a building which would also have Ndina and her husband's room) would open out to, although it would have some partially visual obscuring enclosure all around. There would also be a strong spatial relationship between the girls' rooms and the epata space; Ndina remarked that this would assist the girls and make it more convenient for them since they would be more involved in food preparation. At the same time, the position of the boys' rooms was defensive, and placed closer to the entrance. This she felt was also appropriate as the boys could enter and leave at night without waking the entire homestead. In terms of materiality and design, Ndina wanted the buildings in the homestead to mimic some residential buildings she liked in Windhoek. In the final concept, the researcher proposed a simple narrow north-facing building with a double pitch and easy expansion possibilities on either side, with rooms connected by a single-loaded corridor along the north. The spatial layout of the homestead's master plan was also based on Ndina's brief and required her main dwelling to be close to the epata space, which would be furthest from the homestead's entrance. Her brother's room, which they also intend to make the boys' rooms for any younger male residents in the homestead later, is located closer to the entrance of the homestead. The oshoto space is located centrally in the homestead and is

intended to be a central social area for the residents. It is reinterpreted from the customary oshoto space, as it is not so crucial to Ndina that the oshoto space be exclusively for the male residents.

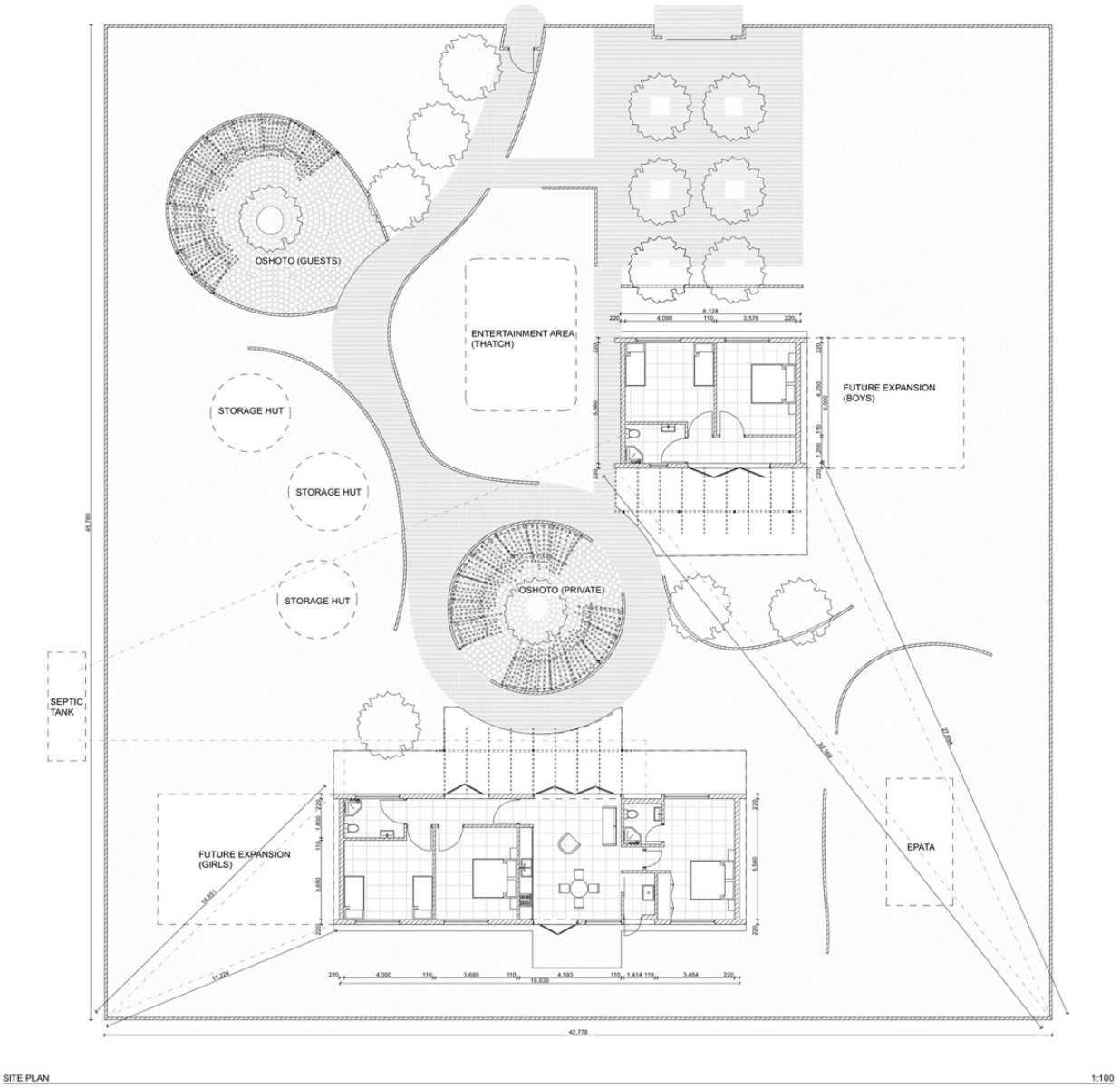

Figure 54: Concept diagram showing the conceptual master plan layout of Ndina's homestead. The spatial layout also shows areas for future expansions. Source: Author



Figure 55: Image showing the recently completed north facing structure in Ndina's homestead. Source: Author

5.6 Coding themes from the observations and narrative interviews

The data analysed in this study emerged from narrative interviews conducted at different stages of the research process. These included exploratory field visits used to identify participants and refine the scope of the case study, ethnographic participant observation undertaken once the case had been defined, and follow-up narrative interviews conducted to saturate the data. Earlier interviews also informed subsequent discussions, allowing the research process to remain iterative and responsive to issues emerging from the field. Although the interviews were conducted at different moments, the data was coded as a single body of material. In keeping with grounded theory methodology, the coding process unfolded in two stages: an initial coding phase followed by a focused coding phase. No preconceived categories were imposed on the material. Instead, coding was undertaken manually so that the researcher could engage repeatedly and iteratively with the data, allowing codes and themes to emerge from the narratives, field notes, and observations themselves. Figure 61 illustrates the initial coding process, including the extracted codes from field memos and narrative interview notes. At the same time, it remained important to recognise that interview data could not answer every research question in isolation, and that its analytical value would later be strengthened through triangulation with observation and document analysis.

Initial coding phase:

A central finding emerging from the interview data in the initial coding phase was that the homestead is understood by residents not merely as a physical dwelling, but as a socio-spatial resource situated at the intersection of housing and livelihoods. Across the narratives, the homestead appeared as shared shelter, productive space, social infrastructure, and an anchor within broader networks of kinship, commonage, and reciprocity. In relation to urbanisation and development, the dominant concern expressed by affected residents, particularly homestead heads, was that compensation was inadequate in both scenarios presented to them: upgrading into an urban form of occupation, or relocating and re-establishing the homestead elsewhere on communal land. The coding process therefore revealed that what was at stake was not simply the loss of a house, but the disruption of a far wider assemblage of social, spatial, and economic relations. Figure 62 shows how the codes were synthesised into broader themes. These themes are discussed below.

Loss of access to existing infrastructure

One of the earliest and most consistent themes to emerge from the interviews was the importance of existing infrastructure to the everyday functioning of the homestead. Urban areas are often proclaimed around settlements that already contain key services and facilities, many of which were established through earlier state decentralisation, apartheid administrative investment, or mission infrastructure such as schools, clinics, churches, canals, and post offices, typically located along transport routes. In the case of Outapi, residents described these facilities as already embedded in their daily routines long before formal urban proclamation. Access to a clinic, school, water infrastructure, roads, or a trading point was not treated as an abstract developmental benefit, but as part of the lived ecology of the homestead. The interviews indicated that relocation threatened to sever these established relationships to infrastructure, particularly where new sites on communal land were more distant from services on which households had come to rely. Development, in this sense, was experienced ambivalently: while urban expansion promised new opportunities, it also carried the risk of undoing existing forms of access that residents already depended on.

Lack of resources to upgrade or relocate as a result of poor compensation

A second major theme concerned the inadequacy of compensation under the Guideline for Compensation of Communal Land. Interviewees repeatedly argued that the compensation offered was insufficient both to support relocation and to enable meaningful upgrading into an “urban” homestead. The problem lay not only in the amount paid, but in the logic through which value was assessed. Compensation was largely based on visible, measurable, and habitable structures as recognised through formal planning standards, together with the size of the field and homestead. This reduced the value of the homestead to its physically built elements. It did not fully account for trees, productive landscapes, natural resources, temporary or semi-permanent structures, or the social and economic value attached to the homestead as a shared and lived resource. The interviews further showed that compensation failed to recognise the multiple forms of dependence attached to the homestead: extended family members who used it seasonally, dependants who lived there intermittently, labourers accommodated through kin or household arrangements, and others who benefited from the housing resource without fitting formal categories of ownership or occupation. As a result, compensation rendered the homestead legible to the state in a narrow technical sense, while obscuring the broader social and livelihood relations that gave it meaning and value.

Loss of commonages under Traditional Authority custodianship

The coding also revealed that the loss experienced by residents could not be reduced to the loss of an individual plot or a set of buildings. For many interviewees, the homestead was inseparable from the wider commonage landscape held under the custodianship of Traditional Authorities. This broader territorial system included grazing areas, access routes, water points, surrounding fields, and other shared resources that supported domestic life and livelihoods. Residents' narratives showed that the value of the homestead depended partly on these surrounding communal resources, especially where households combined residence with livestock keeping, crop cultivation, and seasonal subsistence practices. Field observations reinforced this, as many homesteads were clearly oriented not only inwardly toward domestic structures, but outwardly toward fields, movement routes, and shared land beyond the demarcated residential enclosure. Once communal land is proclaimed urban, however, these commonages are often reclassified, fragmented, or absorbed into urban planning frameworks, making their continued use uncertain. The findings therefore suggest that what is lost through proclamation is not only a homestead site, but also access to a wider resource landscape that has historically sustained the homestead as a viable socio-economic unit.

Endorsed displacement as a result of a top-down approach and the limited participatory capacity of Traditional Authorities

Another theme that emerged strongly from the data was the experience of displacement as a process sanctioned from above. Residents often described proclamation, surveying, valuation, and compensation as procedures that arrived already framed in technical and administrative terms, with only limited scope for substantive local influence. Although Traditional Authorities were formally expected to represent communal interests, interviewees suggested that their role in practice was constrained. In some instances they were perceived as being informed after major decisions had effectively been made; in others, they lacked the technical knowledge, institutional leverage, or legal tools to challenge urban planning processes meaningfully. This produced a sense that displacement had been endorsed rather than negotiated. The issue was therefore not only physical removal, but also procedural exclusion. Residents frequently experienced the process as one in which they were expected to adjust to state-defined outcomes rather than participate in shaping them. The findings indicate that displacement was normalised through the convergence of planning authority, bureaucratic procedure, and weakened customary representation, rather than through a genuinely participatory process.

The homestead as a way of participating in the land and housing market

The interview material also pointed to a more strategic and aspirational dimension of homestead transformation. In several cases, the homestead emerged not only as a site of tradition, subsistence, and social reproduction, but also as a means through which households could participate in emerging land and housing markets. Residents described, and field observations confirmed, the gradual thickening and diversification of homestead space through the addition of detached modern structures, extra sleeping rooms, more permanent materials, and in some cases spaces that could accommodate tenants, relatives, or other income-generating uses. Such changes suggest that the homestead can function as a vehicle through which households position themselves within anticipated urban growth. Rather than simply resisting urbanisation, residents may also engage it tactically, using the homestead to access future land value, housing demand, or new opportunities for income and social mobility. This theme is significant because it complicates any simple reading of the homestead as either purely traditional or purely threatened. Instead, the findings show that homestead adaptation may also be strategic, entrepreneurial, and future-oriented.

Clash of communal land rights versus urban land rights

A final major theme concerned the clash between communal and urban land rights. Interviewees did not experience this only as a legal transition, but as a confrontation between two fundamentally different logics of land, value, and belonging. Under communal tenure, rights are socially embedded and relational, linked to kinship, customary authority, use, inheritance, and long-term occupation. Under urban tenure, land is increasingly individualised, surveyed, registered, and regulated through formal planning and cadastral systems. The movement from one regime to the other therefore transforms not only how land is governed, but what land means. Some residents recognised in urban tenure the promise of formal recognition, greater service access, and a degree of security. Others viewed it as a system that narrowed their claims, weakened flexibility, and severed land from the wider network of social and livelihood relations that had previously made it meaningful. The coding shows that the communal–urban nexus is structured by this unresolved incompatibility between two land-rights systems. Homestead adaptation thus occurs not simply in response to physical change, but within an ongoing struggle over the terms on which land can be occupied, valued, and reproduced.

Taken together, these themes show that the encounter between the homestead and urban proclamation is not experienced merely as a question of physical transformation. Rather, it involves the reorganisation of livelihoods, access to resources, forms of authority, participation in decision-making, and the meaning of land rights themselves. The coding therefore reinforces the central argument of this thesis: that the

homestead is not a passive object awaiting replacement by urban form, but an active socio-spatial assemblage whose transformation reveals the deeper contradictions of planning, compensation, and urbanisation at the communal–urban nexus.



Figure 56: Extracted in vivo codes (initial coding) from the narrative interviews in a messy arrangement

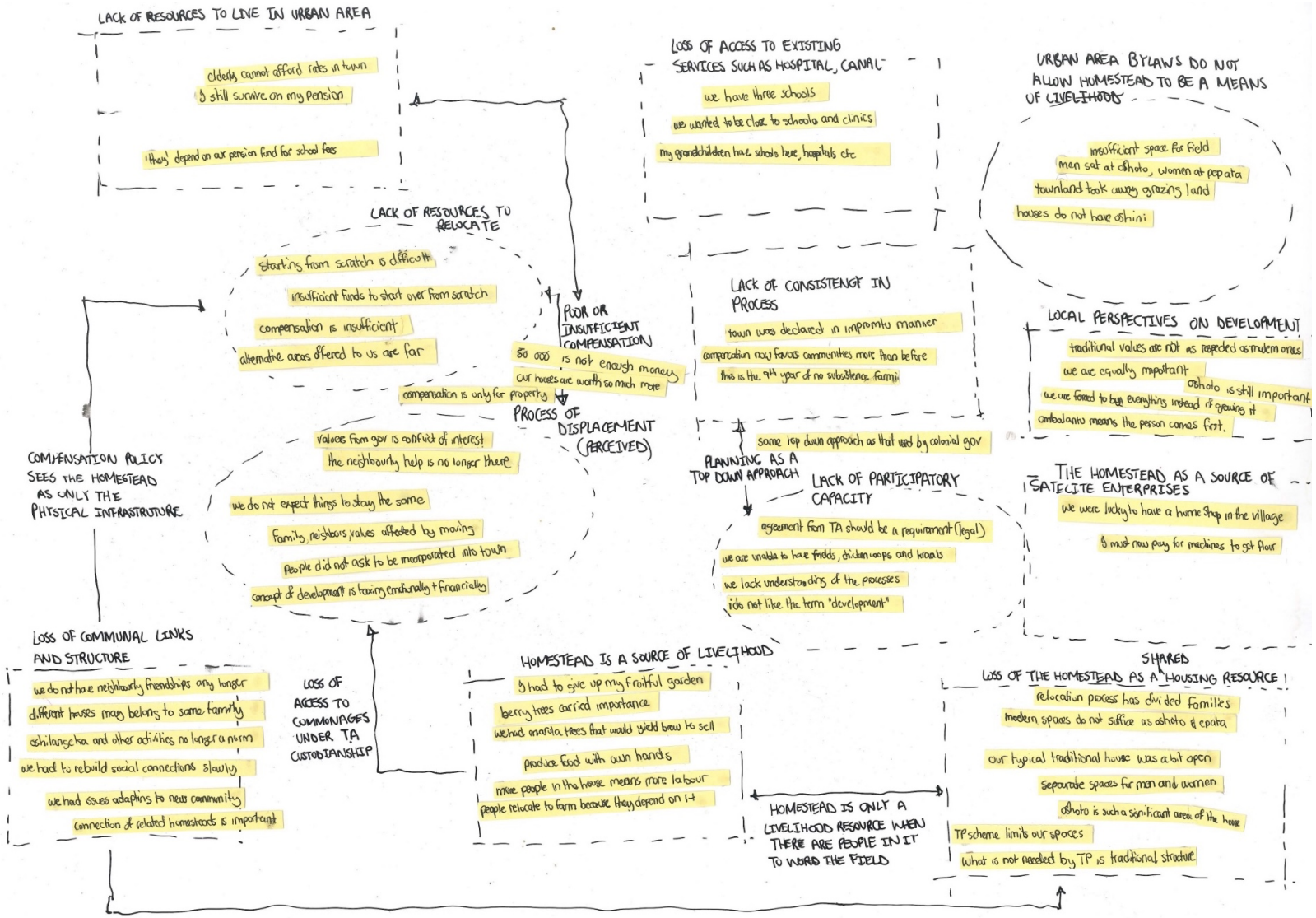

Figure 57: Contextualisation and generating relationships between codes (initial coding) using the in vivo codes extracted from the narrative interviews

Focused coding:

Following the initial open coding, a second layer of coding was undertaken in which recurrent and related codes were compared, clustered and refined into higher-order themes. This process did not replace the earlier coding, but built on it by drawing out broader analytical relationships across the cases. Some preliminary themes identified in the first layer of coding were retained, while others were refined, merged or expanded through a second layer of coding in order to better capture the relational and multi-scalar nature of the findings. The codes from the focused coding are shown in Table 5 below.

Table 5: Table showing the themes and codes from the focused coding exercise.

Open codes for focused coding (*not in vivo*) (All methods coded) *Some codes are reused where relevant.*	**Focused theme** **(all methods triangulated)**	Short note on how the codes relate to the theme.
- triadic epata–oshoto–onu relationship; - persistent proximity logics; - spatial substitution of oshoto; - selective reinterpretation of customary spatial roles; - compressive urban spatial change; - additive communal spatial change; - ceremonial reintroduction of spaces	**1. Resilient and reassembled spatial patterns**	This theme emerges from codes showing that vernacular spatial relations and logics persist, but often through compression, substitution, or selective reinterpretation rather than exact reproduction. (observed in urban and reestablished homesteads)
- homestead as livelihood infrastructure; - livelihood-driven flexibility in gendered space; - shared accommodation as family support; - ceremonial recreation of space; - food preparation for sale; - domestic space as elder care and childcare space	**2. Domesticity at the intersection of housing, livelihood and care**	This theme draws together codes showing that the homestead is simultaneously a domestic, economic and care space, rather than being reducible to housing alone. (observed in urban,

		communal, and reestablished homesteads)
- town-inspired material aspiration; - urban modernity as normative ideal; - homestead as incompatible with "urban"; - planning-led delegitimisation of homesteads; - aspiration toward "developed" housing; - urban exposure shaping taste and materials	**3. Shifting perceptions of the urban and town-informed material aspiration**	This theme emerges from codes showing both the external discourse of the urban and the internalised aspirations residents develop through exposure to Outapi town.
- decline of subsistence farming as domestic organiser (loss of kraal); - distributed householding; - circulating labour across places; - remittance-supported domesticity; - reconfigured obligations and entitlements; - weakening of agrarian role structure; - multi-local family reproduction	**4. Transformation of housing–labour relations and distributed householding**	This theme brings together codes showing that the decline of farming changes internal household relations, while the household itself becomes distributed across village, town, informal settlement and city.
- homestead as social security; - homestead as spatial fallback; - practical anchor in economic precarity; - urban insecurity producing continued value of homestead;	**5. Re-strategised livelihoods, spatial security and the homestead as fallback**	This theme emerges from codes showing that the homestead remains valuable not only culturally, but as a safe and relatively secure fallback under precarious urban conditions.
- loss of social support networks; - erosion of neighbourly reciprocity;	**6. Fragmentation of community networks and socio-spatial support systems**	This theme draws from codes showing that relocation and upgrading do not only change

- weakening of ritual collaboration; - loss of shared labour systems; - breakdown of everyday access between homesteads		housing form, but also weaken the support networks that once linked neighbouring homesteads.
- compensation anxiety; - top-down planning process; - inadequate consultation; - procedural exclusion; - undervaluation of non-material assets; - loss of customary spaces; - loss of attached fields and agrarian livelihood; - relocation as socio-spatial dispossession	**7. Experiences of displacement, exclusion and socio-spatial dispossession**	This theme emerges from codes showing that displacement is experienced not only physically, but also culturally, economically, socially and politically.
- anticipatory upgrading for valuation and services; - strategic boundary making (Ndina's homestead); - upgrading for future compensation; - homestead as leverage in tenure transition; - material choices shaped by valuation - expectations; maximising land claim; - homestead as strategic asset	**8. The homestead as an entry point into urban land and housing markets**	This theme emerges from codes showing that residents (particularly heads and heirs) increasingly treat the homestead as a way of navigating compensation, tenure formalisation and future incorporation into the urban land market.

1. Resilient yet reassembled spatial patterns

Across both communal and urban contexts, the homestead retains identifiable spatial logics, particularly in the recurrent relationships between the *epata*, *oshoto* and *onu* spaces. However, the cases also show that these patterns do not persist unchanged. In upgraded and urban homesteads, customary spatial relations are often compressed, substituted, or selectively reinterpreted through elements such as verandas, courtyards, or reconfigured reception spaces. The persistence of these relations therefore points not simply to continuity, but to a resilient domestic logic that is reassembled under changing material and urban conditions. This is especially evident where urban homesteads show more direct

entrance-to-enclosed-space relations and reduced spatial networks, while communal homesteads remain more additive, mediated, and expansive in their organisation.

2. Domesticity at the intersection of housing, livelihood and care

The homestead operates simultaneously as a housing resource, a livelihood platform, and a site of care. Shared accommodation arrangements support extended family economies, while domestic spaces are adapted to host food preparation, storage, informal vending, childcare, elder care, and ceremonial activities. In this regard, the coding showed that the homestead is not simply a domestic container, but an active infrastructure through which households sustain themselves. At the same time, the narratives show that residents remain anxious about the erosion of customary practices where homesteads lose the spatial capacity to host ceremonies in culturally appropriate ways. The temporary or partial reintroduction of elements such as *oshoto* and *omikala* for weddings illustrates the continuing indispensability of certain forms, even where everyday domesticity has been reorganised around urban livelihoods.

3. Shifting perceptions of the urban and town-informed material aspiration

Residents and officials alike hold strong perceptions of what counts as “urban”, often in ways that sit uneasily with the continued presence of vernacular or customary homesteads within town boundaries. Within formal planning discourses, homesteads are frequently treated as incompatible with urban modernity, and are at times grouped alongside shack dwellings or informal residential forms, despite their distinct cultural and spatial logic. At the same time, the cases show that residents themselves are not outside of these urban imaginaries. Urban exposure shapes aspirations around materials, room layouts, boundary walls, multi-storey building, and the meaning of a more “developed” house. The urban therefore appears not only as an external planning category imposed on the homestead, but also as a material and discursive horizon that residents selectively draw into domestic transformation.

5. Transformation of housing–labour relations and distributed householding

Urban upgrading and relocation disrupt the housing–labour nexus that historically structured the homestead. The weakening or loss of subsistence farming reduces the social and spatial framework through which roles, obligations, housing entitlements, and interdependence were organised within the household. Yet the cases also show that this does not simply produce a smaller or weaker household form.

Rather, domesticity becomes more distributed across communal homesteads, informal settlements, town, and city. Household reproduction increasingly depends on circulating labour, remittances, schooling arrangements, visiting patterns, and kin-based support across multiple sites. The transformation of housing–labour relations is therefore also a transformation in the scale and geography of the household itself.

6. Re-strategised livelihoods, spatial security and the homestead as fallback

The homestead has also been reinterpreted as a form of social, spatial, and economic security. For elders, working-class residents, and those whose livelihoods remain precarious, the homestead continues to function as a fallback space, less exposed to rental insecurity, urban market pressures, and the instability of informal income. This helps explain why some residents continue to value the homestead even when their daily lives are partly urbanised. In addition, some households actively upgrade or maintain homesteads not only for present use, but because they provide continuity across life stages and moments of economic uncertainty. The homestead therefore remains important not only as a cultural form, but also as a practical anchor in conditions of urban precarity.

7. Fragmentation of community networks and socio-spatial support systems

The relocation, dispersal, or upgrading of homesteads leads to the weakening of community structures that once linked neighbouring homesteads into more cohesive networks of mutual support. The cases show that neighbouring compounds often shared labour, food, grain, water, ritual collaboration, childcare, and forms of everyday access that extended beyond the single homestead enclosure. When homesteads relocate or become spatially compressed within urban land regimes, these relations are harder to maintain. The result is not only the fragmentation of spatial form, but the fragmentation of support systems that once underpinned collective resilience.

8. Experiences of displacement, exclusion and socio-spatial dispossession

A pervasive theme across the interviews is that urban expansion is experienced by many residents as a form of forced displacement, exclusion, and delegitimisation. Dissatisfaction is not limited to inadequate compensation values, but extends to the wider disregard of culturally significant spaces, subsistence systems, neighbourly support, and long-established relations to land. Participants repeatedly expressed

frustration at their limited influence over planning processes, the weakened role of traditional authorities, and the narrow criteria through which homesteads are valued by external evaluators. What emerges from this is not displacement in a purely physical sense, but a broader form of socio-spatial dispossession in which residents lose not only land, but also the social, cultural, and livelihood systems embedded in the homestead.

8. The homestead as an entry point into urban land and housing markets

Finally, the homestead increasingly serves as a strategic entry point into urban land and housing markets. Households upgrade, enlarge, reposition, or materially improve homesteads not only for immediate domestic use, but also to improve compensation outcomes, strengthen future tenure claims, or prepare for eventual incorporation into formal urban systems. The coding showed that this anticipatory logic is particularly visible where households provide for future service connections, choose materials with valuation in mind, or maximise the enclosed area of the homestead in expectation of future reblocking. In this sense, the homestead becomes not only a domestic and cultural unit, but also a strategic asset through which residents negotiate the political economy of urbanisation.

5.7 Reflections on the limitations of autoethnography on the findings

A key point of friction in the data was that participants often described local practices as being replaced, diminished, or threatened by urban expansion, and tended to frame the homestead as holding a more complete and authentic value in its communal form. At the same time, the cases also showed that residents benefited from proximity to urban areas, even before formal proclamation. In Onakayale, for example, many of the homesteads had access to infrastructure and services made possible by its proximity to town, including an old water reservoir which was filled with water from town in Mk Iipinge's homestead, as well as electrification that was more feasible because of its location close to Outapi. There was therefore a tension between the desire to maintain the familiarity, sociality, and spatial logic of the homestead, and the simultaneous willingness to benefit from the services, opportunities, and material advantages associated with urban proximity. This tension was important because it complicated any simple reading of the participants as either resisting or embracing urbanisation. The researcher engaged this friction by returning to participants in ordinary conversation and discussing these contradictions as they emerged, not in order to challenge their accounts, but to understand how they themselves rationalised these positions.

A second friction in the data concerned the question of agency. Participants did not necessarily perceive themselves as actively shaping the outcomes of the communal–urban nexus or the emergent spatiality of Outapi. For many of them, the process was experienced primarily as top-down, with local authority decisions, planning controls, and compensation procedures determining the terms of change. The interpretation that residents were also shaping urban outcomes through their tactical adaptations, negotiations, refusals, and selective reintroduction of customary spatial practices is therefore the researcher's analytical reading of the material, rather than the participants' own explicit framing. This required careful reflection. On the one hand, the participants' sense of exclusion and powerlessness was a valid account of how urban expansion was experienced. On the other hand, a wider reading of the data suggested that residents were not merely passive recipients of change. Their dissatisfaction contributed to revisions in compensation procedures, while their continued adaptation of homestead forms within urban conditions also pressured planners and local authorities to confront the persistence of customary spatiality. The friction here lay between lived experience and analytical interpretation.

The insider position of the researcher made these tensions both easier and harder to see. It made them easier to access because the researcher was already familiar with the language, rhythms, norms, and everyday meanings of the homestead, and could recognise subtleties that might be missed by an outsider. However, this same familiarity also carried the risk of normalising what appeared ordinary, and therefore overlooking contradictions, silences, or moments where the data did not fully align with prior assumptions about place and practice. Knowing the "truth" of the place, in a lived and embodied sense, could make it more difficult to pause at points of inconsistency and treat them as analytically significant. For this reason, friction in the data became especially important, because it disrupted the ease of recognition that insider knowledge can produce.

The use of open-ended narrative interviews helped to regulate some of this risk. Because participants were allowed to narrate their experiences in their own terms, and because the researcher did not impose a rigid interview structure, the narratives at times moved in directions that challenged the researcher's own expectations. In addition, the research resisted the temptation to translate all observed spaces and practices into formal architectural terminology. Some spaces do not have direct English equivalents, and in such cases, description, participant language, and vignette-based writing were used to retain something of the spatial and cultural specificity of the homestead. This was important in preventing premature abstraction and in keeping the analysis grounded in the lived texture of the cases.

Similarly, the use of in vivo codes, together with close reliance on direct observation and participant quotations, helped to delay interpretation until a fuller body of material had been assembled across methods. Rather than fixing meaning too early, the coding process allowed themes to emerge through comparison between interviews, observations, vignettes, and drawings. This triangulation was particularly important given the insider position of the researcher, as it created some analytical distance from what might otherwise have been treated as self-evident. In this sense, the challenge of insider research was not only one of bias, but of over-familiarity. The task was therefore not to eliminate subjectivity, but to remain critically reflexive about how familiarity shaped what was immediately visible, what required further questioning, and what forms of friction in the data demanded closer attention.

Chapter 6: Discussion – Interpreting the findings through assemblage

6.1 Introduction

This chapter synthesises the findings to address the three research questions posed in Chapter 1. The discussion is framed through assemblage theory, which provides a vocabulary to describe the co-constitution of spatial, social, material, and institutional elements at the intersection of communal and urban land. Assemblage, in this thesis, refers to the dynamic configurations that emerge when multiple actors (homesteads, traditional authorities, planners, policymakers), materialities (infrastructure, spatial layouts, housing types), and logics (communal tenure, modern planning) interact. This chapter explores how the transformation of Owambo homesteads, whether through relocation, formalisation (upgrading to the urban standard in order to secure urban land tenure), or resistance, reveals assemblage-like qualities of *adaptation*, *partial coherence*, and *multiplicity*. Each section corresponds to a research question and presents a concise theoretical argument derived from the data. The aim is not merely to describe change but to frame it as evidence of power, negotiation, and competing rationalities.

Research on the production of space, the sociological meaning of space, as well as socio-spatial practices, is often embedded in a few notable and recurrent theoretical debates which attempt to relate society to space such as space syntax theory by Hillier and Hanson, structuration theory by Anthony Giddens, and the theory of space by Henri Lefebvre. Mills (1986) proposes a method for the research of southern African domestic architecture by combining the space syntax theory by Hillier and Hanson which are a set of techniques to analyse spatial configurations and the structuration theory by Anthony Giddens.

More recently, there are many emerging theoretical debates on the social, spatial, economic, and political manifestations in urban areas. There is also a call for scholars to agree on foundational concepts of urbanisation and urban form, to develop a common language when conducting urban research (Storper & Scott, 2016). These influential theoretical debates are (1) assemblage theory, (2) planetary urbanism, and (3) post-colonial urban theory. Scholars such as Mould (2016) argue that there is no need for a foundational concept to guide urban studies, and argue that if there is to be a unified urban theory, it should view cities as differing intensities of the urbanisation process and not aim to arbitrarily define what is and what is not a city. Although Storper and Scott's argument against the debates is largely valid, particularly with postcolonial theory's "provincialization of knowledge", the researcher argues it is

inherently necessary to create a localised understanding of the empirical phenomenon in the global south urbanism as a point of departure for any attempts at really defining what 'urban' is in these contexts. Storper and Scott further criticise planetary urbanism for its "radical devaluation of the forces of agglomeration and nodality in urban- economic geography" (Storper & Scott, 2016, p. 1114). Assemblage theory on the other hand, which Storper and Scott criticise for its eclecticism and indeterminacy, offers a theoretical and conceptual approach that accounts for the complexities of urban areas and how they are constructed from many parts with complex networks and histories.

Assemblage provides a useful theoretical and ontological point of departure because its eclectic orientation is better able to account for the complexity of spatial outcomes in urban areas, which emerge through the interaction of actors, their relationships, histories, aspirations, and policy frameworks. This is particularly relevant at the nexus of urban and communal land, where spatial outcomes are visibly heterogeneous and cannot be adequately understood through fixed or standardised definitions of the urban, especially those derived from Western neighbourhood models and their social, economic, and political assumptions. Assemblage is also valuable because it allows analysis across multiple scales, from actors, networks, and materialities at the city-wide level to the neighbourhood and domestic scales of space and dwelling. In this sense, assemblage thinking moves beyond explaining the spatial, social, economic, and political manifestations of urbanism; it also offers a basis for proposing how urban areas might be built or transformed through empirical knowledge grounded in everyday realities.

McFarlane (2011) offers one such investigation on what assemblage might offer as a conception of urban areas in the global south by bringing assemblage into debates around the dwelling. He argues that assemblage is a useful way to think of the city as 'dwelling', but also that it can account for the spatiality of urban spaces, including its usefulness in also accounting for urban areas as processual, relational, mobile, and unequal. McFarlane thinks of assemblage as both orientation to the world and an object in the world, such as policy production, to a house, or other type of infrastructure. Brenner et al. (2011) reviewed the emerging efforts to use assemblages for a critical urban theoretical foundation in urban studies and argue that there is no single 'assemblage urbanism', and thus, there is no comprehensive critique against assemblage. They do however distinguish between political economy and assemblage thought and criticised assemblage approaches for their rejection of structure in favour of 'naïve objectivism'. This they feel will deprive assemblage approaches of the important explanatory tools necessary to understand the socio-spatial aspects in which urban spaces are located.

An urban area can be conceived as an assemblage, and a house can also be viewed as an assemblage. Particularly when you view these two scales of entities not as nouns, but verbs, and not as outcomes, but processes. Dovey (2013) illustrates this multiscalar use of assemblage from urban planning to architecture by thinking of architectural spaces as smaller assemblages. In drawing to this reference, the researcher is aiming to argue assemblage thinking's multi-scale applicability, as smaller assemblages such as a homestead, can be enmeshed into larger assemblages such as urban areas or cities. Dovey (2009) further argues that assemblage can also be used as a theory for 'space', allowing us to account for the sociological aspects of everyday life which the socio-spatial activities to architecture and urban planning. Through the thinking presented by Dovey (2009, 2012, 2013) and Muminovic (2019) (who also combines the idea of 'place' with assemblage, and Kamalipour and Peimani (2015) who position assemblage as an effective theoretical lens for understanding the complexity of cities at different scales of sociality and spatiality, the homestead is an assemblage of the physical buildings and their use; the family which resides in it; the formal urban or formal indigenous spatial by-laws/customs which influence its spatial form and transformation at the nexus; the social and spatial manifestation of their agency in wanting to reinforce the values of a 'traditional' homestead, as well as those which result from the tension between a 'traditional' vs modern expressions of home.

6.2 Discussion on the first research question

How do residents adapt or reconstruct domesticity and architectural forms when their homesteads encounter the communal urban nexus?

The findings show that residents adapt and reconstruct domesticity and architectural form through selective material upgrading, the reorganisation of spaces within the homestead, and the adjustment of everyday practices in response to changing urban, economic, and social conditions. These transformations do not suggest that the homestead is simply replaced by urban housing, nor do they suggest that domesticity remains unchanged. Rather, the findings indicate that the encounter with the communal–urban nexus produces new configurations of domesticity and architecture while retaining important aspects of the homestead as a socio-spatial formation. In this sense, domesticity at the nexus is neither static nor entirely displaced, but emergent.

A first important finding is that material and architectural transformation often begins before formal incorporation into the urban boundary. In Mk Iipinge's[18] homestead on urban land, much of the material quality associated with urban housing had already been adopted before the homestead was fully subjected to urban planning regulations. This was partly due to the homestead head's formal employment status, income level, and the homestead's proximity to the urban area, which enabled access to improved infrastructure and building materials. The presence of a small shop also shows that the urban condition had already begun to influence the domestic and economic arrangement of the homestead prior to full formalisation. This suggests that urban transformation at the nexus is not only the effect of proclamation and planning by-laws, but also of earlier relations of proximity, aspiration, and infrastructural access.

This is also evident in Tk Shilongo's[19] homestead on communal land. Although it remains outside the formally expanded urban boundary, the material transformation of the homestead is already strongly influenced by urban forms and incomes. Many of the newer buildings that have replaced clustered vernacular huts have taken the form of detached suburban three- to four-bedroom typologies similar to those of formal housing in Outapi. Jonas's intention to build a verdieping or multi-level structure is particularly significant in this regard. It is not driven by scarcity of land within the homestead, but by the symbolic and practical attraction of a higher-order urban residential typology. The homestead here is not only adapting materially; it is also orienting itself toward an anticipated urban future. Architectural adaptation at the nexus is therefore not simply reactive, but aspirational.

At the level of domesticity, the findings reveal a more subtle but equally important transformation. Domesticity in the homestead remains spatially structured, especially in communal settings where customary norms continue to organise the expected use of spaces in relation to gender, privacy, age, and social hierarchy. However, the findings also show that at the nexus, particularly in upgraded urban homesteads, this domestic order becomes more fluid in specific ways. In Meme Frieda's[20] homestead, for example, the frequent use of the epata space by her grandsons to prepare food items for sale in Outapi suggests an emergent domesticity in which a space that might more commonly be associated with women and young girls in a communal homestead is being reworked through urban livelihood practice. The significance of this finding lies not in proving that the homestead has always been fluid in the same way,

[18] Mk Iipinge's homestead is covered in the findings chapter 5.5.3

[19] Tk Shilongo's homestead is covered in the findings chapter 4.19

[20] Ms Frieda's homestead in covered in the findings chapter 4.21

but in showing how urban conditions and income-generating pressures introduce new forms of domestic flexibility into an already socially structured space.

A similar shift is evident in the altered significance of tobacco leaf buds in Meme Frieda's homestead. The buds once held value in customary practices as gifts, currency, and personal consumption, and this value shaped the amount of time, care, and space allocated to them within the homestead. However, as the number of surrounding homesteads reduced and the customary demand for the buds declined, so too did their spatial and social importance. This is important because it shows that domesticity at the nexus is not only being reshaped by formal planning and land tenure change, but also by the weakening or reconfiguration of the social networks and customary circuits through which homestead life had previously been sustained. Changes in domesticity are therefore both spatial and relational.

Assemblage helps make sense of these changes because it allows domesticity and architecture to be read as emergent properties of interacting elements rather than as fixed cultural forms. Emergence is a key characteristic of assemblages because the qualities of the assemblage do not reside in any single component, but arise through the interaction of the composition as a whole. In this research, the nexus can therefore be understood as an emergent condition produced through the encounter between communal land and urban land. At one scale, the homestead itself is an assemblage constituted by buildings, spaces, uses, kinship, domestic routines, and formal and informal rules. At another scale, the nexus is a larger assemblage within which homesteads, proclaimed urban areas, cuca shops, roads, oshanas, local authorities, traditional authorities, and residents interact to produce a distinct urbanising condition. Assemblage is therefore useful because it can account both for the material form of the homestead and for the wider social, political, and economic relations through which that form is transformed.

Understanding the homestead and the nexus in this way also cautions against static terms such as "traditional." Assemblages are never complete or fixed; they remain in process as their heterogeneous elements and relations continue to shift. To describe the homestead simply as "traditional" risks reducing a living, evolving socio-spatial formation to a stable category. Conceptualising it instead as an assemblage makes it possible to see that new spatial organisations emerge not from space or practice alone, but from their continuing interaction. The findings show that domesticity at the nexus remains structured by kinship, hierarchy, and custom, yet is also being reconstructed through material upgrading, livelihood pressure, aspiration, and changing social relations.

Overall, the research shows that residents adapt and reconstruct domesticity and architectural form not by abandoning the homestead, but by reworking it. The homestead retains its role as a shared housing resource, a site of intergenerational continuity, and a place of livelihood and social reproduction. Yet the encounter with the nexus introduces new arrangements, new uses, and new overlaps between domestic and economic life. The result is not a simple continuity with the past, nor a total absorption into the urban present, but an emergent socio-spatial condition in which domesticity and architecture are actively reassembled.

6.3 Discussion on the second research question - The territorialisation and deterritorialisation of the nexus assemblage

In what ways are spatial characteristics retained, negotiated, or abandoned under new housing and urban land tenure arrangements?

The findings show that the encounter between communal and urban land tenure does not result in the total replacement of homestead spatiality. Rather, it produces uneven spatial outcomes in which some characteristics are retained, others are negotiated, and others are abandoned. The most important changes are not only visible in material transformation, but in altered spatial depth, thresholds, orientations, productive spaces, and the changing relations between key spatial elements such as onu, oshoto, and epata. The findings therefore suggest that the most significant transformations at the nexus are socio-spatial rather than merely morphological.

A first important observation is that several key spatial characteristics are retained, particularly in the communal homesteads. The typomorphological analysis shows that communal homesteads generally preserve a more robust sequence from public to private space, maintaining or even increasing spatial depth across the homestead. In these cases, intermediary spaces such as *omikala (*corridors) and the *oshoto (*reception space) continue to mediate movement, while the *epata* (food making space) remains positioned at the furthest and most protected spatial depth. This indicates that key aspects of the homestead's internal logic remain resilient even where material transformation has occurred. The retention of these relationships suggests that the socio-spatial organisation of the homestead continues to be shaped by customary understandings of privacy, vulnerability, and domestic order.

Some characteristics are also retained in urban homesteads, but often in altered form. The typomorphological findings show that the *onu–epata–oshoto* triad is mostly preserved across both communal and urban cases, although the orientation of these spaces is often altered in the urban homesteads. In this sense, the urban homestead does not simply cease to be a homestead. Instead, it retains a recognisable domestic core while reorganising that core under new material and regulatory conditions. This shows that urbanisation at the nexus is not simply an external imposition upon a void, but a process that works through already existing socio-spatial formations.

At the same time, many characteristics are negotiated rather than simply retained. This is especially visible in the urban homesteads. Here, the material expression of the homestead has shifted strongly toward urban standards: round thatched huts are widely replaced with fewer larger square or rectangular cement-brick structures, and stick palisades give way to higher cement-brick walls, often intensified by security concerns. Yet despite these changes, everyday life within the homestead continues to preserve aspects of the collective and multifunctional domestic order. In some urban cases, spaces such as *ondjuwo* and *omikala* are rebuilt with temporary materials to prepare the homestead for customary ceremonies. This suggests that negotiation does not occur only at the level of building form, but also through the selective reintroduction or maintenance of ceremonial and customary spatial elements even within an urbanised setting.

Negotiation is also evident in the three broad conditions or outcomes identified in the findings. The first is the communal homestead at the nexus which remains outside the formal urban boundary, such as Tk Shilongo's homestead. Here, domesticity and spatial practice continue to be strongly structured by communal land rights, agrarian livelihood, and interdependence with neighbouring homesteads. The second is the urban homestead that has been incorporated into the urban boundary and subjected to planning by-laws, such as Meme Frieda's homestead. Here, livelihood activities linked to the field are reduced or removed, but the internal life of the homestead still retains a recognisable homestead logic with adaptations. This is further supported by the sketch design process as informed by the brief provided to the researcher by Ndina[21] for the reconstruction of her inherited homestead. Although the sketch layout developed with Ndina is for a completely modern homestead which maximises on potential compensation if relocated, or full compliance with by-laws if the homestead stays in the urban area, it still applies the same spatial logic such as the onu-oshoto-epata triad persistent in both urban and communal

[21] Ndina's homestead is covered in findings chapter 5.5.6

homesteads. The third is the reestablished homestead on another area of communal land, such as Meme Rosalia's[22] case. This condition attempts to reassemble the spatial and social relations of the earlier homestead in a new location, but usually under material constraints that prevent a full reconstruction of what was lost. These three conditions show that the spatial outcome of the nexus is not singular; it is differentiated across a spectrum of territorial, material, and livelihood responses.

Other spatial characteristics are more clearly abandoned, especially in urban homesteads. The typomorphological survey shows that fields and kraals are largely removed in urban cases, while cuca shop structures are reduced or disappear. Corridor and threshold systems are also often removed, replaced by more direct spatial transitions. These changes are significant because they mark the erosion of the productive and mediated landscape through which the homestead previously functioned. Where the field and kraal are lost, the homestead can no longer operate in the same way as a site of agrarian livelihood, and its role as a shared housing resource is further affected, as those who shared in this resource by working in the field are no longer needed. Where thresholds are compressed or removed, the carefully layered movement from public to private space is weakened. Urban spatial change therefore appears more compressive, consolidating, and reformative, while communal spatial change remains more additive and mediated.

These empirical findings can then be read more clearly through *territorialisation and deterritorialisation*. Territorialisation refers to the ways in which an assemblage is stabilised, bounded, and held together. In the case of the communal land assemblage, territorialisation occurs through the socio-spatial practices, customary expectations, and decision-making structures through which traditional authorities administer land and social order. The role of the Traditional Authority in allocating land, mediating disputes, regulating commonage, and sustaining customary homestead life is therefore part of the way the communal land assemblage territorialises itself. In Tk Shilongo's homestead on communal land, the land rights for are still administered by the TA, and there are existing strong social links with other homesteads in a territorialised communal land system as shown conceptually in Figure 63 below.

[22] Meme Rosalia's homestead is covered in findings chapter 5.5.5

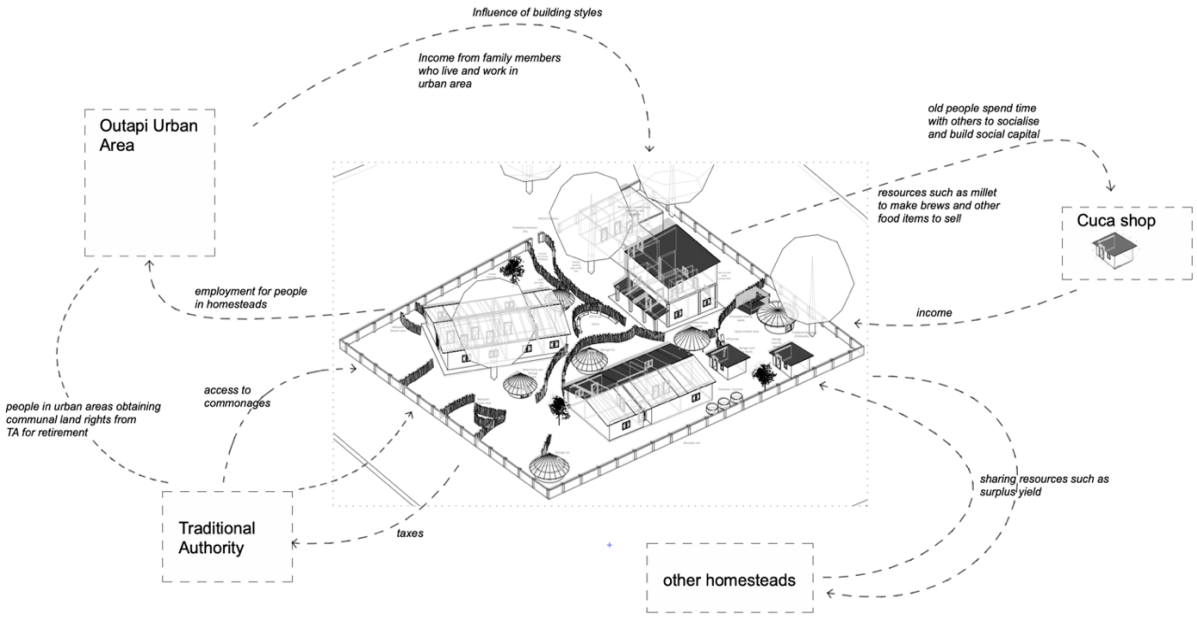

Figure 58: Diagram conceptualising the territorialisation of communal land networks featuring Tk Shilongo's homestead as a unit within.

In Ndina's homestead, for example, the intervention of the TA in facilitating who the head of the homestead would be is not only an administrative act, but part of the socio-spatial territorialisation of the homestead and its continuity within the communal land system.

Other practices also territorialise the communal assemblage. The strengthening or reintroduction of customary spatial elements during ceremonies is one such example. In Meme Frieda's upgraded urban homestead, the reconstruction of spaces such as ondjuwo and omikala using temporary materials in order to host customary practices suggests that territorialisation is not only about fixed boundaries or permanent materiality. It can also occur through recurring socio-spatial acts that reaffirm a way of inhabiting and organising space. Territoriality here is therefore broader than cadastral boundary-making. It includes rhythms of domesticity, thresholds of privacy, ceremonial occupation, and the continued social ordering of space.

The urban assemblage territorialises differently. It territorialises through cadastral surveys, planning schemes, compensation procedures, urban standards, building regulations, and the formalisation of land rights as shown in Figure 64 below.

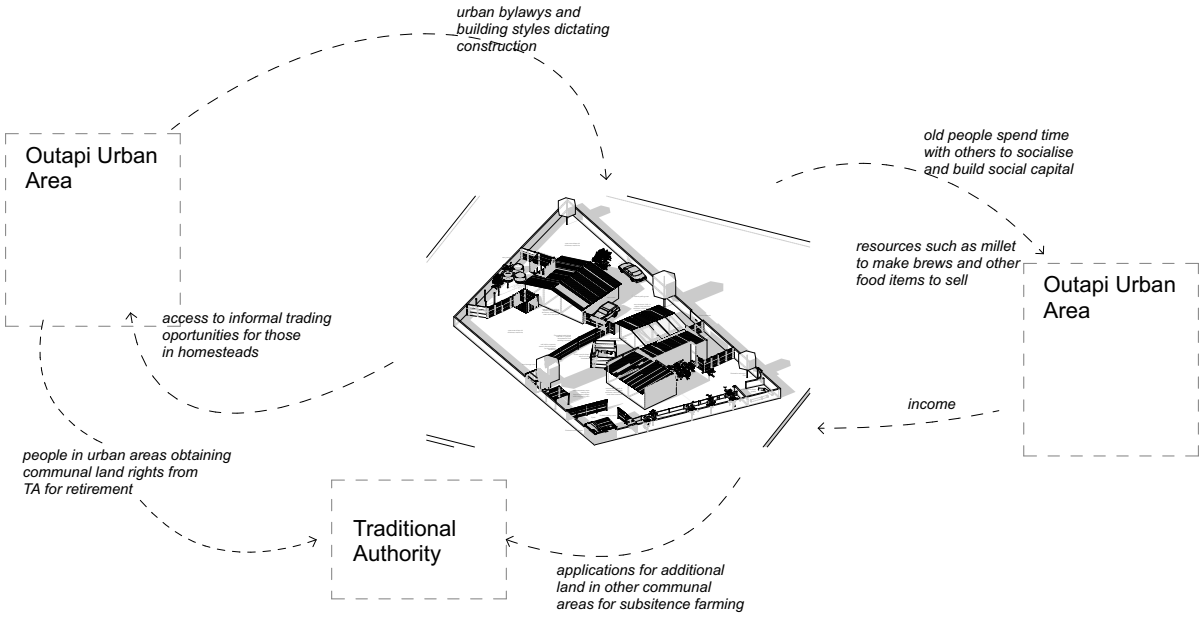

Figure 59: Diagram conceptualising the territorialisation of urban land networks featuring Meme Frieda's homestead as a unit within.

These processes establish boundaries, regulate acceptable spatial forms, and attempt to stabilise space according to the logic of the planned urban area. In Ndina's case, the remedial work on the homestead in anticipation of valuation and compensation shows how urban territorialisation can begin before full incorporation, as residents adjust their spatial practices in response to the logic of compensation and formal urban tenure. The urban assemblage therefore territorialises not only through legal proclamation, but also through anticipatory spatial behaviour by residents themselves. Territoriality is more than just a defensive act; it is a creative process that stabilises the assemblage, creating a space of comfort and order, a feeling of home that helps to keep chaos and disruption at a distance (Deleuze & Guattari, 1987). Ndina's strategy, which is also adopted by others, is in a sense a creative overlap of leveraging communal land rights to benefit more from the urban development through compensation which is already seen as something which cannot be avoided.

When these two assemblages come together, the territorialisation of one often entails the deterritorialisation of the other. Deterritorialisation, in this case, refers to the erosion, weakening, or reorganisation of existing socio-spatial orders. Urban proclamation and compensation may deterritorialise communal domesticity by removing fields, reducing spatial depth, compressing

thresholds, and displacing homesteads from the agrarian and social networks in which they were previously embedded. At the same time, residents enact their own forms of deterritorialisation by reorganising living arrangements within urban plots, maintaining collective occupation, selectively preserving customary spatial elements, and resisting the complete takeover of their domesticity by the urban plan. In this sense, deterritorialisation is not one-sided. It is part of the mutual interruption through which the nexus itself emerges.

Reterritorialisation then occurs through the formation of the nexus assemblage itself. The communal and urban assemblages do not simply remain intact while colliding from opposite sides. Their interaction generates new socio-spatial realities that begin to territorialise in their own right. The upgraded urban homestead is one such example: outwardly, it may take the form of detached buildings enclosed by a high boundary wall and thus resemble the materiality and morphology of the urban area, while inwardly, the daily life of the homestead persists with adaptations. The reestablished communal homestead is another example: it attempts to reconstruct the earlier socio-spatial order in a new location, though usually with fewer resources. These cases show that the nexus is not simply a site of transition or failure. It is a productive rupture in which territorial orders are being reassembled through lived practice.

Assemblage theory is important here because it allows the spatial findings to be read without assuming that one coherent order simply replaces another. Instead, it reveals that spatial transformation at the nexus is partial, negotiated, and unstable. The empirical findings show clearly that some characteristics are retained, some negotiated, and some abandoned. Territorialisation and deterritorialisation help explain why that is the case: because the nexus is a site where different spatial logics coexist in tension and continue to reshape one another. In this sense, the answer to the second research question is not only that urbanisation transforms indigenous spatial characteristics of the homestead, but that it does so unevenly through a process of assemblage, where continuity and disruption remain entangled.

6.4 Discussion on the third research question - Implications for the policy guidelines for compensation

What does this adaptation of domesticity and architecture reveal about the tensions of planning and compensation systems in Namibia?

The adaptation of domesticity and architecture within the homestead reveals a fundamental tension between the way planning and compensation systems understand land and housing, and the way the homestead actually functions at the nexus of urban and communal land. The compensation policy treats the homestead primarily as a set of built and natural features to be valued materially. However, the findings of this research show that the homestead is not reducible to its visible structures alone. It is a socio-spatial system composed of domesticity, livelihood, kinship, inheritance, land claims, and shared housing. The central tension revealed by the findings is therefore not only that compensation values may be inadequate, but that the conceptual basis of compensation does not adequately correspond to the lived reality of the homestead.

This issue emerged strongly throughout the participant observation and interviews. The impact of the compensation guidelines on communal land was repeatedly raised by participants as one of the most significant aspects of urban development at the nexus. Residents did not feel that those who relocated, lost their fields, or upgraded their homesteads to the urban standard were left in an equal or better socio-economic position after compensation. The compensation policy was therefore experienced not merely as a technical instrument, but as one of the most influential determinants of how urban development affected their domestic and economic lives. The review process initiated by the Ministry of Urban and Rural Development after the Second National Land Conference in 2018 is important in this regard, because it shows recognition that the policy required revision. The review was a result of a resolution from the second land conference, to review the compensation policy every two years so that people are not compensated according to outdated values for their homesteads. Other inputs regarding the compensation policy were also analysed by the researcher and are summarised in Figure 65 below.

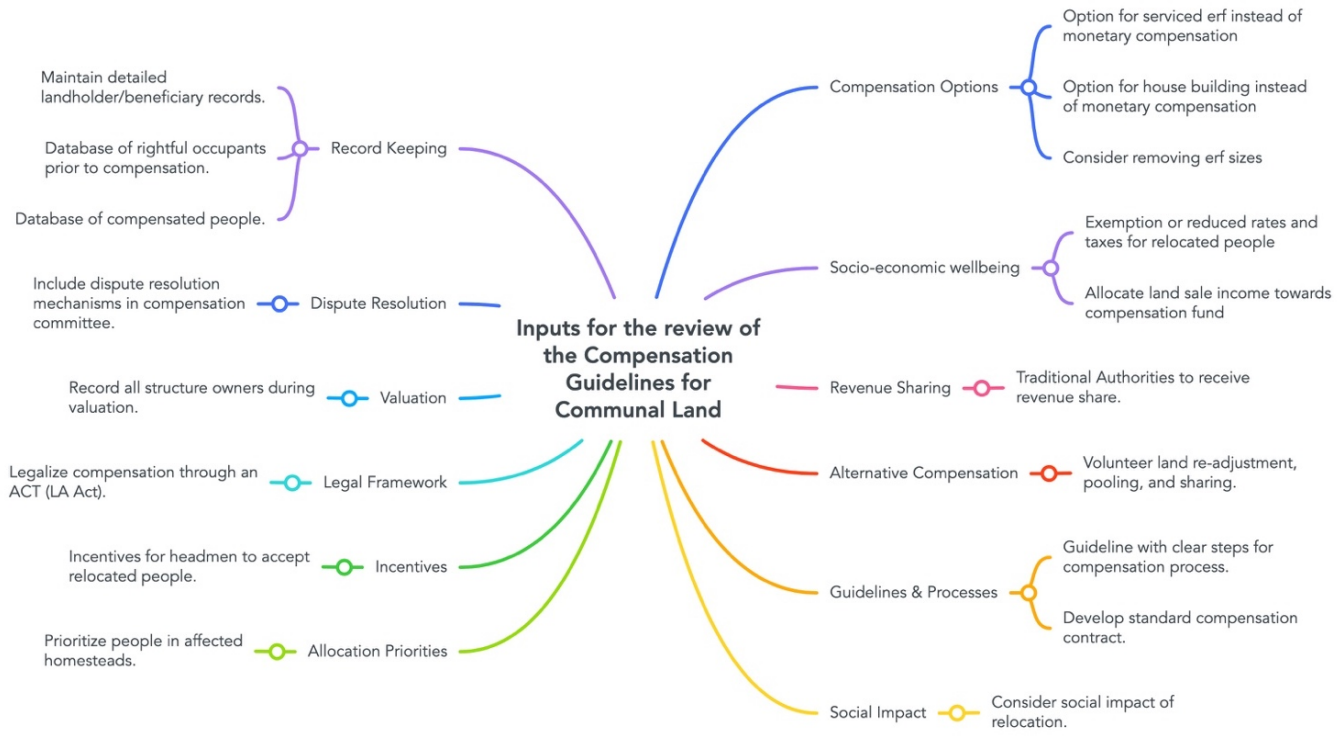

Figure 61: Mind map analysis of the inputs on the review of the guidelines for the compensation of communal land. Source: Author.

The resolutions further aim to streamline land rights registration in communal areas, enhancing the efficiency of regional offices. There is a need for traditional authorities to be actively involved in land matters, ensuring that all communal communities have appropriate representation. The resolutions also emphasised the prioritisation of women in land redistribution policies to ensure their access to land. It recommended reviewing all policies related to land redistribution to prioritise women, youth, war veterans, and persons with disabilities. The inputs were gathered through a series of sessions and written comments involving various stakeholders, including local authorities (LAs), regional councils (RCs), traditional authorities (TAs), and affected community members. The sessions occurred in regions and cities, including Rundu, the four O-regions[23], and Windhoek.

During these sessions, participants discussed and provided feedback on various aspects of the compensation policy for communal areas, focusing on specific topics such as disturbance allowances, land. Yet even this review process, with its regional consultations, written inputs, and iterative refinement, still

[23] The Four-O regions denotes the administrative regions which make up Owamboland in North central Namibia namely: Oshikoto, Ohangwena, Omusati (with Outapi as its administrative capital), and Oshana.

operates largely within a framework that assumes that the impact of development can be assessed primarily through financially measurable terms.

Assemblage is useful here because it reveals more clearly what planning and compensation fail to see. The homestead at the nexus has become an assemblage reflective of the urban condition in both a material and a non-material sense. Materially, it increasingly combines vernacular and suburban housing forms, often including detached cement-brick sleeping rooms, indoor cooking spaces, living rooms, and high boundary walls. Non-materially, however, the homestead remains a site through which communal land rights are claimed, negotiated, and reproduced. Residents who are not the heads of the homestead often build rooms in and around the homestead as a way of making a claim to housing and land within the communal system. In Tk Shilongo's homestead, this is visible in the structures built by his children, including Jonas, Pena, and Pandeni. Jonas's construction of a multi-storey room is not simply a building choice; it is part of a claim to continued housing and land access within the homestead. Nailonga's shack in the informal settlement of Onimbu represents a related but different strategy: a claim to urban land tenure through occupation. These different claims show that land and housing at the nexus are not simply allocated from above, but are actively produced through spatial practice.

This has major implications for the compensation policy. The policy compensates the heads of homesteads on the basis of the built and natural features of the homestead, but the findings show that many other people also depend on the homestead as a housing resource. These include direct children, grandchildren, extended family, labourers, and others who may have lived and worked in the homestead for long periods. When compensation is directed primarily to the head of the homestead, there is no guarantee that the compensation will be proportionally shared in a way that allows all residents to replace their housing loss. As a result, many of those who are not the heads of the homestead may be displaced without an equivalent pathway to secure housing, often leaving them with little choice but to relocate to another area of communal land or move into informal settlements in urban areas. The findings therefore show that the compensation framework reproduces inequality within the homestead by recognising only one legal expression of a much wider collective domestic arrangement.

A further tension revealed by the findings is that compensation has effectively become an instrument through which communal land rights can be converted into urban land tenure. For those homestead heads who choose to remain and upgrade, the compensation process can provide access to urban opportunity through the award of an additional erf, the reblocking of the homestead into the townlands, or the

possibility of rental development. Meme Frieda's acknowledgement of the value of the additional plot, even without a defined plan for it, and Ms Aifete's successful management of a rental property on an inherited additional erf both suggest that compensation is doing more than compensating loss. It is also redistributing access to urban land in selective ways. This is an important finding because it means that the compensation policy is simultaneously a mechanism of disturbance payment and a mechanism of urban tenure access.

This uneven access becomes clearer when considering the categories of people identified in the findings: the heads of the homestead (aakuluntu), the direct children and grandchildren eligible to inherit communal land rights (aavalwa), and the broader group of extended family, friends, and labourers (aatekulwa) as shown in Figure 66 below.

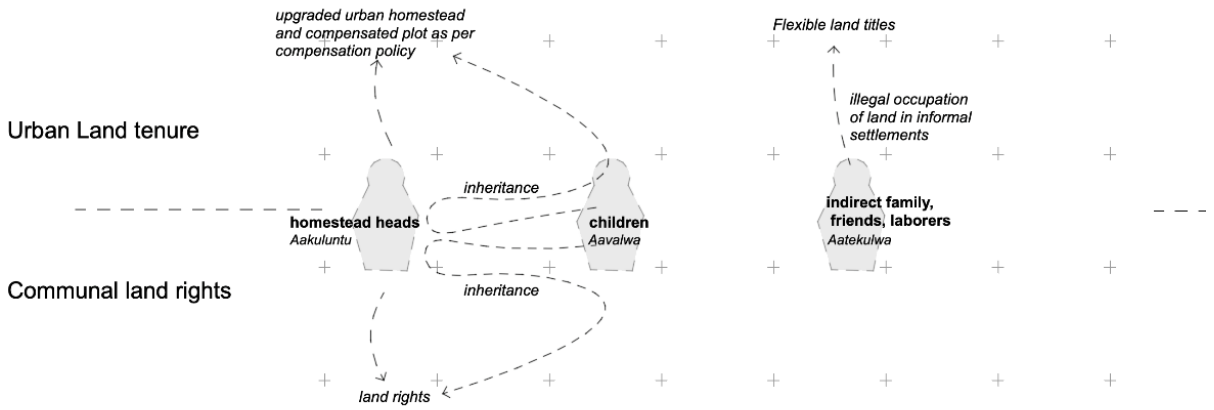

Figure 62: Image showing the different routes to urban land tenure for the different categories of people in the homestead. This schematic reveals a tension in collective vs individual land rights.

Those who are not direct descendants do not have the same access to urban land tenure through compensation as those more closely tied to the recognised head of the homestead. Yet they may still depend heavily on the homestead as housing. The findings therefore reveal that the compensation framework aligns more easily with individualised inheritance and cadastral logic than with the collective socio-spatial logic through which the homestead actually operates. In this respect, the policy mirrors a broader technocratic planning rationality that simplifies collective domestic systems into individualised legal units.

This is where the critique of *essentialism* becomes important. The compensation policy reduces the homestead to physical infrastructure and measurable improvements, while the findings show that the

homestead is an assemblage of socio-spatial flows and intersections. It is not just a collection of structures, but a living arrangement through which shelter, subsistence, labour, care, and land access are organised. The mismatch between these two understandings reveals a deeper tension between socio-spatial logics and cadastral logics. Planning and compensation territorialise and standardise lived space into plots, values, and regulated forms. The homestead, however, continues to operate through shared occupation, flexible domestic arrangements, customary inheritance, and layered claims to land and housing. The adaptations observed in the findings, including multi-room extensions, pre-emptive upgrading, selective retention of ceremonial spaces, and the use of compensation as a route into urban tenure, are therefore both responses to the planning system and critiques of its limitations.

The findings suggest that current planning and compensation approaches rely on spatial rationalities that do not align with the socio-economic functions of the homestead. Financial compensation and plot-based relocation simplify complex lifeworlds into material value. This logic reflects a territorialising impulse to standardise, quantify, and simplify. However, the evidence indicates that homesteads are assembled spaces, not reducible to plots or structures. A more responsive approach would require a move away from linear compensation models toward more relational frameworks that recognise shared housing arrangements, assess livelihood disruption more seriously, and incorporate residents more meaningfully into relocation and settlement design processes. More fundamentally, it would require planners to recognise that homesteads are not obstacles to development, but existing housing and socio-spatial resources through which urban life is already being produced at the nexus.

Ultimately, the adaptation of domesticity and architecture reveals three central structural tensions in Namibia's planning and compensation systems: *Collective vs. individual land rights* (homestead as shared space vs. head-only compensation); *Socio-spatial logics vs. cadastral logics* (vernacular assemblages vs. plot-based valuation); *Cultural continuity vs. technocratic planning* (reintroduction of spatial elements vs. erasure in urban schemes). These tensions show that urban development at the nexus is not simply a neutral technical process. It is a political and spatial process through which some forms of life are made legible and compensable more easily than others. Assemblage is useful here because it makes visible the broader system of relations that the compensation framework reduces or ignores. The findings therefore call not only for revised compensation amounts, but for a deeper shift in how planning itself understands the homestead.

The Grounded Theory

This section synthesises the empirical findings by addressing the research questions through the conceptual framework of assemblage. Earlier in this chapter, the domesticity, architecture, and socio-spatial practices of the Owambo homestead were conceptualised as an assemblage: fluid, layered, and relational rather than fixed or bounded. Drawing on assemblage theory, particularly the concepts of territorialisation and deterritorialisation, the researcher has demonstrated how communal and urban land assemblages interact at the nexus: disrupting, reinforcing, and reconfiguring each other into emergent assemblages with hybrid realities.

This theoretical framework is not applied abstractly but emerges from grounded empirical data. Based on participant observation, interviews, and typomorphological surveys, the researcher has argued that the domesticity of homesteads at the urban communal nexus actively shapes the emergent urban space.

In generating a grounded theory from this data, the researcher engages with existing literature on rural resilience and restructuring (Lendvay, 2018; Woods, 2014), but moves beyond it to foreground domesticity and spatial practice as central mechanisms of transformation. This research reveals that the homestead's architectural persistence and adaptability serve as a spatial strategy not only resisting displacement but also shaping the material and social logic of emerging urban areas. This constitutes what Simone (2004) refers to as subaltern urbanism: city-making from below, grounded in informal logics and everyday survival.

The researcher therefore theorises that spatial production at the nexus occurs through two interrelated logics: the logic of transformative domesticity and the logic of anticipatory tenure:

(1) Transformative domesticity: Residents upgrade or reconfigure their homesteads in anticipation of urban integration. These spatial adaptations, whether through new building designs, subdivision for rentals, or the layering of formal materials, are not simply responses to urban planning but are instrumental in shaping the urban form itself. This indicates that urban expansion is co-produced by homesteads, not only by planners or policy.

(2) Pre-emptive claims to tenure: Households with communal land rights at the urban fringe effectively hold a latent urban land claim. As towns like Outapi expand, these households become functionally similar to those in informal settlements awaiting in-situ upgrading. The compensation

process transforms communal tenure into a form of urban land entitlement, even without formal cadastral alignment. This positions compensation as a means of informal formalisation, comparable to flexible land tenure systems used elsewhere in Southern Africa.

The implication is that Owambo homesteads at the nexus are not separate from the urban; they are integrated within it, shaping its spatial and social contours. Therefore, any urban planning framework that neglects the productive capacity of homestead domesticity is both incomplete and unjust. Local authorities, empowered by the Local Authorities Act of 1992, are responsible for formalising urban land and facilitating access to housing markets. The grounded theory presented here indicates they must treat annexed communal land in the same way as informal settlements: with in-situ upgrading, tenure recognition, and minimal displacement. This approach aligns not only with best practices in pro-poor urban development but also with the socio-spatial reality on the ground where domesticity, land use, and architecture already anticipate urbanisation.

Chapter 7: Conclusions and recommendations

7.1 Introduction

This chapter concludes the thesis by synthesising the major findings, reflecting on the theoretical contributions, and proposing key recommendations. The researcher investigated the domesticity of the Owambo homestead at the urban communal land nexus in northern Namibia, arguing that these practices are not merely disrupted by urbanisation but are adapted and actively participate in producing urban space. Grounded in an assemblage perspective, the research findings have evinced the complexity of this encounter and its implications for planning, theory, and everyday life.

The discussion chapter linked this encounter to broader debates on domesticity, particularly in how traditional homesteads function as both living spaces and sites of economic activity. The rigid urban planning frameworks disrupt the fluid boundaries between domestic and productive spaces, affecting household labour distribution and social interactions. The process of deterritorialisation is evident as urban planning mechanisms impose rigid spatial structures, leading to the reconfiguration of traditional homesteads into standardised housing plots that no longer fully support indigenous domesticity and socio-spatial practices.

7.2 Revisiting the objectives and theoretical underpinnings

The research process was concerned with understanding domesticity and socio-spatial practices at the nexus of communal and urban land. This encompassed two main aspects, the first being the everyday life activities in and around the homestead (the domesticity), and the social practices which produce space (the socio-spatial practices). The researcher chose to use assemblage and grounded theory as a lens through which to investigate the homestead and the nexus due to its multiscale applicability and constructivist alignment. The researcher had to consider what the appropriate ontology and epistemology for an approach to socio-spatial research (be it urban or communal) in the global south should be. The need for careful consideration resulted from the literature review of existing research on the homestead and settlement patterns in Owamboland, establishing as well that architecture and urban planning in northern Namibia is largely the result of more than a century of non-responsive modernist planning apparatus, which was initially applied and fine-tuned within the framework and interests of the colonial and apartheid project. Within this context, the researcher relied on assemblage as a theoretically

responsible approach to pair with grounded theory as he believes that the realities on the ground are constructed through everyday activities, practices, agents and realities which need to be understood in order to move away from normative dispositions and the resulting processes in urban areas. Assemblage theory was a good conceptual lens to guide the grounded theory approach because it is able to account for the realities of how a place is constructed and how the nexus of urban and communal land emerges through the rhizome of these aspects of everyday life, practices, agents and realities.

7.2.1 How do residents adapt or reconstruct domesticity and architectural forms when their homesteads encounter the communal urban nexus?

In addressing the first research question, the research finds that domesticity in the Owambo homestead is not a passive set of cultural routines but a strategic and spatialised practice that mediates everyday life, land claims, and livelihood in the context of urban transformation. Through typomorphological surveys, participant observation, and narrative interviews, the study revealed how residents modify their homesteads to suit changing legal, economic, and social conditions. These changes are not unidirectional. They reflect continuity, adaptation and a reassembling of spatial and social norms in response to urban conditions. The homestead retains its role as a productive space, a site of intergenerational memory, and an anchor of land rights, even when integrated into newly proclaimed urban areas.

As Kinchin and Gravett (2020) wrote: “the non-linear growth of the rhizome encourages the development of links to other networks and so exhibits a greater level of knowledge recipience, the ability to actively make connections and to form new understandings.” (p. 4).

The utilisation of the homestead and its associated communal land rights as an instrument to access urban land tenure and compensation by upgrading structures to the urban standard is the ability of the nexus assemblage to make new links which may not have existed before.

7.2.2 In what ways are spatial characteristics retained, negotiated, or abandoned under new housing and urban land tenure arrangements?

In addressing the second research question, the discussion focuses on territorialisation and deterritorialisation within the nexus assemblage. Traditional communal land practices and urban development create tension, leading to new logics of spatial production. The discussion highlights how customary practices and land rights influence the organisation of space within the homesteads at the

nexus. One of the key takeaways from the findings is that while urbanisation disrupts indigenous spatial characteristics of the homestead and domestic practices, households exhibit resilience through economic adaptations in livelihood strategies, as well as other strategies such as the utilisation of the homestead as access to otherwise scarce urban land. These adaptive strategies align with the study's broader argument that indigenous domesticity persists and adapts through modification rather than complete displacement.

However, these adaptations also expose tensions between formal planning policies and local agency. As noted in the findings, regulations often restrict mixed-use and 'alternative' developments within newly formalised urban areas and homesteads, thereby limiting opportunities for sustainable local communities and livelihoods. This favours more sophisticated urban dwellers with formal education and employment, and those who claim urban land rights through occupation by settling on land illegally (through informal settlements) and disfavours local communities who established livelihoods and resilient communities on communal land. The disruption of home-based livelihoods not only affects household income but also alters the socio-spatial arrangements within the homestead, redefining the ways domesticity and economic activities coexist.

7.2.3 What does this adaptation of domesticity and architecture reveal about the tensions of planning and compensation systems in Namibia?

Lastly, in addressing the third research question, the discussion engages and critiques the policy guidelines for land compensation. The compensation process is identified as problematic, particularly in how it undervalues the non-material and socio-spatial practices of homesteads by reducing the homestead to its material components. The research argues that communal land rights at the interface of urban expansion provide direct access to urban land tenure when residents decide to stay and upgrade their homestead to the urban standard for compensation. In this instance, although the main source of subsistence (the field) is lost, cases in the findings chapter have shown adaptations in livelihood strategies (see case 3 in chapter 5.4 where young boys adapt the *epata* space to prepare food items to sell in town) and even more proactive strategies to maximise on compensation (see case 5, chapter 5.4 where the homestead is enlarged to increase compensable area during the pre-emptive homestead upgrading), and urban planning must integrate socio-spatial practices of communal homesteads to ensure equitable development.

Overall, the grounded theory developed from the research findings posits that the domesticity and socio-spatial practices of Owambo homesteads play a key role in the spatial production of urban areas at the communal-urban nexus.

7.3 Summary of Theoretical contributions

This thesis contributes to urban theory in three main ways:

Firstly, the research contributes to assemblage as a heuristic for urbanisation at the margins. By conceptualising the Owambo homestead as an assemblage, the research reveals how spatial transformation at the nexus is the outcome of layered, contingent interactions between policy, architecture, kinship, and land. The use of territorialisation and deterritorialisation in the discussions chapter (Chapter 6) has helped unpack how these forces reconfigure each other at the nexus.

Secondly, the thesis extends Simone's (2004) notion of subaltern urbanism by showing that domesticity and spatial practices in the communal-urban transitions are not only reactive but generative. The residents of annexed homesteads do not passively await urbanisation as observed and discussed in the findings chapter (Chapter 5); they prepare for it, negotiate with it, and shape its outcomes.

Thirdly, the research generated a grounded theory: that domesticity and socio-spatial practices at the nexus of urban and communal land are a means of spatial production. Urban expansion, although it is viewed by those implementing it as a transformative process entailing 'development', is not imposed upon a void, and as a result, it emerges through the actions, adaptations, and aspirations of people already in place.

7.4 Summary of Empirical Contribution

This research offers an empirically grounded account of how Owambo homesteads at the nexus of communal and urban land in northern Namibia operate as active sites of spatial production. Drawing on typomorphological surveys across 40 homesteads in Outapi and Ombalantu, narrative interviews, and ethnographic observation of specific cases, the study captures the everyday spatial negotiations, architectural adaptations, and socio-cultural dynamics that shape the transformation of the homestead in the context of urban development and expansion.

Crucially, the research is conducted through a ground-up, autoethnographic approach by a researcher who is not only academically trained but also embedded in the lived realities of the Owambo homestead. As a native of Outapi with lived experience of the very domestic spaces under study, the researcher brings intimate knowledge of spatial codes, kinship obligations, and practices that are often overlooked in externally conducted research. This positionality enabled a level of access, trust, and interpretive depth that is not always possible in conventional urban fieldwork.

Empirically, the thesis contributes:

(a) A rich comparative analysis of homestead transformations over two decades (2003–2023), revealing how domesticity is not static, and that homesteads are not "traditional", but a spatial logic that evolves through adaptation**;**
(b) A nuanced account of how compensation policies, urban proclamations, and tenure shifts are experienced and repurposed at the homestead level.
(c) Evidence that spatial practices rooted in communal systems persist within urbanised territories, creating hybrid spatial forms and spatial practices that both challenge and exceed the assumptions of formal planning frameworks.
(d) A grounded theory that shows how domesticity and socio-spatial practice respond as functional mechanisms of subaltern spatial production, producing urbanity from below, rather than merely receiving it from above.

Through the process of interweaving this empirical data with a critical reading of assemblage theory, this thesis demonstrates how urban space in northern Namibia, particularly Owamboland, is shaped not only through policy or infrastructure, but also through everyday spatial practices, memory, and resistance, offering a situated and decolonial perspective on African urbanism. The research develops a grounded explanation of how domesticity and socio-spatial practice serve as mechanisms of city-making from below.

7.5 Recommendations

7.5.1 Policy and Framework Recommendations

In this section, the researcher presents recommendations on how the urban planning process can be more responsive to the realities on the ground at the nexus of urban and communal land. The recommendations

are aimed to fit within the legal instruments and processes which are already active at the nexus. These processes are administered by the Traditional Authority, the Ministry of Urban and Rural Development (MURD), the Namibia Planning Advisory Board (NAMPAB), and the Local Authority involved as in the case of Outapi, the Outapi Town Council (OTC). It is important to consider that while these recommendations are those closely directed at the concerns of people on the ground, the Namibian government through MURD is constantly reviewing its instruments such as the compensation policy on communal land to ensure that the instruments are equitable. Through the 2nd National Land Conference held in 2018, there were various resolutions made directed towards the issue of the compensation of communal land, as well as the social and economic well-being of those who have been affected by urban development processes at the nexus. In fact, one of the resolutions was to constantly revisit and revise the compensation policy every two years, to allow stakeholders on the ground a stronger and more prominent hand in the process. There is a soft consensus that an appraisal of the development on communal land must be in the form of monetary or financially measurable objectives at the local level. In addition, people feel like they cannot stand in the way of this 'development', and that they must make way for it. However, it is important to consider that the instruments and processes employed could render urban development a form of government-endorsed displacement for communities on communal land, which is the result of a process which can be interpreted as a 'carrot and stick' approach, which ultimately leaves people in a worse situation both economically and socially. In addition, the recommendations below are not comprehensive. There exist many more intensive social aspects which are beyond the scope and training of the researcher relating to the physiological wellbeing of residents who live at the nexus and encounter the urban development processes. Research within different disciplines is required to create comprehensive support measures for these communities.

The recommendations are as follows:

1. Ensuring access to communal land rights to those who are not the heads of the homesteads.

The research findings have suggested that access to communal land rights at the nexus affords people access to land tenure through direct incorporation of the land they are occupying into urban land. The research has also established that the homestead is a shared housing resource with a hierarchy of people who live and work in the homestead, however, with varying access to communal land rights. When the homestead chooses to relocate, or to forfeit the field as an enterprise, there are those who may no longer be able to reside in the homestead. For many of these residents, the high cost of urban land and housing

means that the only claim for urban land tenure is through the illegal occupation of land in informal settlements. In essence, the access to urban land, even in smaller parcels with consent use for housing and subsistence farming for all residents, means that they are more likely to not be displaced.

2. Compensation for those who are not the heads of the homestead or their next of kin, but share in the resource of housing within the homestead

The recommendation is cognizant of the fact that there is also a shortage of communal land to be allocated by TAs. The suggestion, in this case, is that people should be able to register to homesteads much in the same way that those on urban land have access to flexible land tenures so that they are in a position to be compensated for their inconvenience when the heads of the homesteads in which they reside decide to relocate or upgrade their homestead to the urban standard. This will allow those on communal land who have no direct communal land rights to be treated equitably like many of the residents who have occupied informal settlements in urban areas and are eventually awarded land titles.

3. Establish non-material compensation factors for inclusion in the compensation guidelines

The current consideration of the compensation policy for items which will be valued and compensated to the homesteads on urban land which choose to relocate only includes the built infrastructure (huts, cement brick buildings, fences), and natural features such as trees and small water bodies which may be on the area of land that the homestead sits on. The severity of the impact on those in the homestead who choose to relocate also depends on other factors, such as their proximity to schools, hospitals, the canal, and churches. The empirical data gathered in the research shows that people on communal land do benefit from the proximity to the town where they may use the economic opportunities present.

7.5.2 Spatial Recommendation: Integrating Communal Domesticity into Urban Planning through a concept of Transitional Zoning

This study demonstrates that the homestead, as encountered in the Owambo context, is not merely a residual rural form absorbed by urbanisation, but an active and adaptable spatial agent. The homesteads participate in urban transformation through their architectural modifications, socio-spatial logic, domestic economies, and interaction with planning tools such as compensation and land formalisation. However, current statutory planning instruments such as the Outapi Town Planning Amendment Scheme No. 3, and broader planning legislation, including the Urban and Regional Planning Act (2018) and Local Authorities

Act (1992, amended 2002), often do not adequately recognise or accommodate such hybrid domestic forms within proclaimed urban areas. Homesteads are frequently regarded as irregular or informal, resulting in spatial displacement, the erasure of cultural practices, or forced assimilation into unsuitable cadastral layouts. In response to these issues, and based on the empirical findings and grounded theory of this research, the following spatial recommendation is proposed. This recommendation introduces the concept of a Transitional Homestead Zone: a special zoning that would formally acknowledge the presence and value of homesteads in newly urbanised areas such as the Outapi-Ombalantu nexus area. This zoning overlay would allow for alternative coverage, density, and building regulations suited to adapting homestead layouts. In essence, the special zoning would enable homesteads to maintain their vernacular-modern hybrid forms by granting temporary zoning recognition (e.g., valid for 20–30 years) to support organic and incremental adaptation without displacement, and provide access to public services, but on reduced rates and property taxes, in recognition of their contribution to housing and urban subsistence. This approach is legally compatible with the flexible and context-sensitive provisions of the Urban and Regional Planning Act, 2018, which allows for local authorities to introduce tailored planning schemes and overlay zones. The summary of proposed amendments to the current town planning scheme are shown in Table 6 below.

Table 6: Table showing proposed amendments to the existing town planning scheme required for a Transitional Homestead Zone.

Element	**Existing Provision**	**Proposed Amendment**
Land Use	Informal Residential[24]	Homestead layout: multiple dwellings under one household
Minimum Erf Size	500-900m²	Flexible down to 300m² per structure; total compound up to 1,500m² to accommodate homesteads
Coverage	50–70%	Allow 70–90% to reflect homestead architecture which includes multiple dwelling structures

[24] Existing homesteads are zoned under 'Informal Residential' as 'traditional dwelling units'.

Use Rights	Formal dwelling only	Allow additional kitchens, kraals, storage huts, income-generating structures such as home shops
Building Types	Permanent, formal materials	Include vernacular and incremental building styles
Taxation	Normal urban rates	Reduced rates category for formalised transitional zones

This overlay would be registered through the Town Planning Amendment Scheme procedure and could be temporary (e.g., 20 years), subject to renewal or review.

Integration of subsistence activities

A second component of the recommendation is the allocation of designated peri-urban land parcels, particularly in marginal zones (such as the areas directly adjacent to and including oshanas), for urban subsistence agriculture.

These parcels would:

- Be cadastrally owned and serviced by the local authority;
- Be governed in partnership with Traditional Authorities, who may allocate temporary leases under customary systems;
- Function as communal agricultural zones, supporting food security, livelihood continuity, and land-based identity in the urbanising context.

This model would align with the Outapi Town Council's Strategic Plan (2022–2027), which commits to inclusive growth, local empowerment, and sustainable land use management. It would also offer continuity of practice for households who choose to remain in place after proclamation, ensuring their livelihoods are not severed by urban tenure restructuring.

A major supporting reform is the revision of minimum erf sizes in town planning schemes. Reducing the minimum erf size for residential development would:

- Free up land for urban agricultural use, communal green space, or communal tenure clusters;
- Enable higher-density layouts that are more efficient and compatible with traditional homestead expansion logic;

- Allow for new models of in-situ upgrading rather than full conversion to Western-style subdivisions.

This concept could be applied to transform areas like the research study zone Onakayale into a combined transitional homestead and subsistence peri-urban agricultural zone, created through participatory design processes involving stakeholders such as the homestead heads and residents, the LA, TA, and others.

7.6 Areas for Further Research

The research opens up several avenues for future research that can extend and deepen its findings. Firstly, there is an opportunity for comparative studies across communal-urban interfaces. Similar nexus conditions exist in towns such as Oshakati, Rundu, and Katima Mulilo and their adjacent and often overlapping communal land areas. Comparative studies can explore whether the grounded theory developed here applies across different contexts or requires refinement. Such research would directly support calls by Simone (2004), Pieterse (2011), and Ernstson et al. (2014) for urban theory to be developed from African contexts, rather than simply applied to them. They all advocate for research to theorise from everyday practices, informal land relations, and local logics that shape urbanism from below, conditions that are strongly present in the northern Namibian context but still underrepresented in urban scholarship.

Secondly, there is an opportunity for research on the gendered aspects of spatial transformation. The domestic space, especially in indigenous housing types at nexus areas in northern Namibia, is deeply gendered but under-theorised. Further research could investigate how women's roles in decision-making, caregiving, and income generation influence how homesteads evolve at the nexus. It might also examine how gender affects access to urban tenure after compensation. Klopp and Ngau (2020) show that urban land and planning processes often reproduce gendered exclusions, even where women play a central role in household and informal economic activities. Understanding how women navigate (or resist) these exclusions in Namibian urban-communal interfaces could provide valuable insights for promoting gender-equitable urban policy.

Thirdly, there is an opportunity to explore post-compensation livelihood trajectories. Future longitudinal studies can observe how compensated homesteads perform over time, both socially and economically, and whether their urban integration results in sustainable transformation. In this research, participants

have expressed sentiments that the compensation has left many who have relocated in worse socio-economic conditions than before they received it. Conducting detailed research on the impact of the compensation policy could also offer valuable insights and inform urban policies that help people achieve more favourable socio-economic situations.

References

Adebayo, P., Ndinda, C., & Ndhlovu, T. (2022). South African cities, housing precarity and women's inclusion during COVID-19. *Agenda*, *36*(2), 16–28.

Adhikari, M. (2008). 'Streams of blood and streams of money': New perspectives on the annihilation of the Herero and Nama peoples of Namibia, 1904–1908. *Kronos*, *34*(1), 303–320.

AllAfrica. (2008, September 10). *Namibia: Proclamation of Nkurenkuru as a town*. allafrica.com

Babbie, E. R. (2016). *The practice of social research* (14th ed.). Cengage Learning.

Bassey, F., & Obwona Aber, K. (2017). *The cultural approach to urbanism in African cities: Mapping the past, present and future of cities in the African context* [Paper presentation]. UIA 2017 Seoul World Architects Congress, Seoul, South Korea.

Bengtsson, M. (2016). How to plan and perform a qualitative study using content analysis. *NursingPlus Open*, *2*, 8–14. https://doi.org/10.1016/j.npls.2016.01.001

Berg, B. L., & Lune, H. (2012). *Qualitative research methods for the social sciences* (8th ed.). Pearson.

Bhambra, G. K. (2007). *Rethinking modernity: Postcolonialism and the sociological imagination*. Palgrave Macmillan. https://doi.org/10.1057/9780230206410

Bjerén, G. (1971). *Some theoretical and methodological aspects of the study of African urbanization* (Research Report No. 9). Scandinavian Institute of African Studies.

Brenner, N., Madden, D. J., & Wachsmuth, D. (2011). Assemblage urbanism and the challenges of critical urban theory. *City*, *15*(2), 225–240. https://doi.org/10.1080/13604813.2011.568717

Brenner, N., & Schmid, C. (2014). The 'urban age' in question. *International Journal of Urban and Regional Research*, *38*(3), 731–755.

Brenner, N., & Schmid, C. (2015). Towards a new epistemology of the urban. *City*, *19*(2–3), 151–182. https://doi.org/10.1080/13604813.2015.1014712

Buchanan, I. (2020). *Assemblage theory and method: An introduction and guide*. Bloomsbury Academic. https://www.bloomsbury.com/us/assemblage-theory-and-method-9781350015531/

Chilisa, B. (2012). *Indigenous research methodologies*. SAGE.

Chlouba, V., & He, J. (2021). Colonial legacy, private property, and rural development: Evidence from Namibian countryside. *Economic History of Developing Regions*, *36*(1), 30–56. https://doi.org/10.1080/20780389.2020.1858049

Cnossen, B., & Bencherki, N. (2018). The role of space in the emergence and endurance of organizing: How independent workers and material assemblages constitute organizations. *Human Relations*, *72*(6), 1057–1080. https://doi.org/10.1177/0018726718794265

Colomina, B. (1994). *Privacy and publicity: Modern architecture as mass media*. MIT Press.

Commonwealth Local Government Forum. (2018). *The local government system in Namibia: Country profile 2017–18*. https://www.clgf.org.uk/default/assets/File/Country_profiles/Namibia.pdf

Communal Land Reform Act 5 of 2002. (2002). *Government Gazette of the Republic of Namibia*, (2787).

Creswell, J. W., & Poth, C. N. (2018). *Qualitative inquiry and research design: Choosing among five approaches* (4th ed.). SAGE Publications.

Cruz Petit, B. (2015). Old and new spaces. *Home Cultures*, *12*(3), 311–327. https://doi.org/10.1080/17406315.2015.1084759

David, M. (2022, October 29). Helao Nafidi a growing giant. *New Era*. https://neweralive.na/helao-nafidi-a-growing-giant/

David, M. (2023, October 14). Helao Nafidi gears up for 16th expo. *Informanté*. https://informante.web.na/?p=350216

Davies, G. (1993). *The Ovambo in context: The people, their land and European colonisation* [Doctoral dissertation, University of Kent at Canterbury].

DeLanda, M. (2006). *A new philosophy of society: Assemblage theory and social complexity*. Edinburgh University Press.

DeLanda, M. (2016). *Assemblage theory*. Edinburgh University Press.

Deleuze, G., & Guattari, F. (1987). *A thousand plateaus: Capitalism and schizophrenia* (B. Massumi, Trans.). University of Minnesota Press.

Deleuze, G., & Parnet, C. (1987). *Dialogues* (H. Tomlinson & B. Habberjam, Trans.). Athlone Press.

Department of Foreign Affairs. (1974). *South West Africa survey 1974*. Government Printer.

De Villiers, S., Christensen, Å., Tjipetekera, C., Delgado, G., Mwando, S., Nghitevelekwa, R., Awala, C., & Katjiua, M. (2019). *Land governance in Namibia*. Namibia University of Science and Technology.

Dobler, G. (2008). Boundary drawing and the notion of territoriality in pre-colonial and early colonial Ovamboland. *Journal of Namibian Studies*, *3*, 7–30.

Dobler, G. (2016). Towns as frontiers: Contesting the urban in northern Namibia, 1950–1980. *PERIPHERIE – Politik, Ökonomie, Kultur*, *36*(141), 94–114. https://doi.org/10.3224/peripherie.v36i141.22866

Dodman, D., Leck, H., Rusca, M., & Colenbrander, S. (2017). African urbanisation and urbanism: Implications for risk accumulation and reduction. *International Journal of Disaster Risk Reduction*, *26*, 7–15. https://doi.org/10.1016/j.ijdrr.2017.06.029

Dovey, K. (2009). *Becoming places: Urbanism/architecture/identity/power*. Routledge. https://doi.org/10.4324/9780203875001

Dovey, K. (2011). Uprooting critical urbanism. *City*, *15*(3–4), 347–354. https://doi.org/10.1080/13604813.2011.595109

Dovey, K. (2012). Informal urbanism and complex adaptive assemblage. *International Development Planning Review*, *34*(4), 349–367. https://doi.org/10.3828/idpr.2012.23

Dovey, K. (2013). Assembling architecture. In H. Frichot & S. Loo (Eds.), *Deleuze and architecture* (pp. 131–148). Edinburgh University Press.

Dovey, K., Rao, F., & Pafka, E. (2018). Agglomeration and assemblage: Deterritorialising urban theory. *Urban Studies*, *55*(2), 263–273. https://doi.org/10.1177/0042098017711650

Ellis, C. (2007). Telling secrets, revealing lives: Relational ethics in research with intimate others. *Qualitative Inquiry*, *13*(1), 3–29. https://doi.org/10.1177/1077800406294947

Endjala, T., & Botes, L. (2020). Livelihood coping strategies in an informal settlement of Windhoek, Namibia. *African Sociological Review / Revue Africaine de Sociologie*, *24*(1), 151–173. https://www.jstor.org/stable/26918069

Epstein, A. L., Bruner, E. M., Gutkind, P. C. W., Horowitz, M. M., Little, K. L., McCall, D. F., Mayer, P., Miner, H., Plotnicov, L., Schwab, W. B., & Schack, W. A. (1967). Urbanization and social change in Africa [and comments and reply]. *Current Anthropology*, *8*(4), 275–295.

Ernstson, H., Lawhon, M., & Duminy, J. (2014). Conceptual vectors of African urbanism: 'Engaged theory-making' and 'platforms of engagement'. *Regional Studies*, *48*(9), 1563–1577.

Evers, J. (2016). Elaborating on thick analysis: About thoroughness and creativity in qualitative analysis. *Forum Qualitative Sozialforschung / Forum: Qualitative Social Research*, *17*(1). https://doi.org/10.17169/fqs-17.1.2369

First Capital. (2018). *Economy profile of Outapi*. First Capital Research.

Fjeldstad, O.-H., Tjønneland, E. N., Nygaard, K., & Pomuti, A. (2005). *Local governance, urban poverty and service delivery in Namibia* (Report No. R 2005: 12). Chr. Michelsen Institute.

Förster, T., & Ammann, C. (2018). African cities and the development conundrum: Actors and agency in the urban grey zone. In C. Ammann & T. Förster (Eds.), *African cities and the development conundrum* (pp. 3–25). Brill. https://doi.org/10.1163/9789004387942_002

Foucault, M. (1977). *Discipline and punish: The birth of the prison* (A. Sheridan, Trans.). Pantheon Books. (Original work published 1975)

Fraser, D. (1968). *Village planning in the primitive world*. Studio Vista.

Frescura, F. (1980). *The development of rural vernacular architecture in Southern Africa* [Master's thesis, University of the Witwatersrand].

Fujioka, Y. (2010). Changes in natural resource use among Owambo agro-pastoralists of north-central Namibia resulting from the enclosure of local frontiers. *African Study Monographs, Supplementary Issue 40*, 129–154. http://hdl.handle.net/2433/96292

Ghoddousi, P., & Page, S. (2020). Using ethnography and assemblage theory in political geography. *Geography Compass*, *14*(10), Article e12533. https://doi.org/10.1111/gec3.12533

Giddens, A. (1984). *The constitution of society: Outline of the theory of structuration*. University of California Press.

Gluckman, M. (1940). Analysis of a social situation in modern Zululand. *Bantu Studies*, *14*(1), 1–30. https://doi.org/10.1080/02561751.1940.9676107

Government of the Republic of Namibia. (2008). *Compensation policy guidelines for communal land*.

Haarhoff, E. J. (2011). Appropriating modernism: Apartheid and the South African township. *A|Z ITU Journal of the Faculty of Architecture*, *8*(1), 184–195.

Haihambo, T. (2024, July 4). Ongwediva's bold dream. *New Era*. https://neweralive.na/ongwedivas-bold-dream/

Haipinge, J. (2018). *An investigation of the low-income housing strategy in Namibia: A case study of the Okuryangava suburb in the city of Windhoek in the Khomas region* [Master's thesis, University of Namibia]. UNAM Scholarly Repository.

Hansen, K. T. (1997). *Keeping house in Lusaka*. Columbia University Press.

Hardin, G. (1968). The tragedy of the commons. *Science*, *162*(3859), 1243–1248.

Harvey, D. (1973). *Social justice and the city*. Edward Arnold.

Hayden, D. (1981). *The grand domestic revolution: A history of feminist designs for American homes, neighborhoods, and cities*. MIT Press.

Heath, S., Chapman, L., & The Morgan Centre Sketchers. (2018). Observational sketching as method. *International Journal of Social Research Methodology*, *21*(6), 713–728. https://doi.org/10.1080/13645579.2018.1484990

Hebinck, P. (2021). *Institutionalisation and institutional voids of Namibia's Communal Land Reform Act*. Legal Assistance Centre.

Hillier, B., & Hanson, J. (1984). *The social logic of space*. Cambridge University Press.

Howard, E. (1965). *Garden cities of to-morrow* (F. J. Osborn, Ed.). Faber and Faber. (Original work published 1902)

Huchzermeyer, M. (2004). *Unlawful occupation: Informal settlements and urban policy in South Africa and Brazil*. Africa World Press.

Huchzermeyer, M. (2011). *Cities with 'slums': From informal settlement eradication to a right to the city in Africa*. University of Cape Town Press.

Hu, H. (2019). Different residential forms under the evolution of urbanization. *Current Urban Studies*, *7*(4), 587–597. https://doi.org/10.4236/cus.2019.74031

Iileka, M. (2014, June 23). Development at the heart of Oshikuku. *Namibian Sun*.

Iipumbu, L. M. (2006). *The importance of strategic planning as a tool for effective management in local authorities in Namibia* [Master's thesis, University of Namibia]. UNAM Scholarly Repository.

Inambao, C. (2010, October 29). Rapid growth to urban centre. *New Era*.

Jacobs, J. (1992). *The death and life of great American cities*. Vintage Books. (Original work published 1961)

Jencks, C. (2021). Le Corbusier on the tightrope of functionalism. In R. Walden (Ed.), *The open hand: Essays on Le Corbusier* (pp. 166–213). MIT Press. https://doi.org/10.7551/mitpress/5146.003.0013

Jenkins, P. (2013). *Urbanization, urbanism, and urbanity in an African city: Home spaces and house cultures*. Palgrave Macmillan.

Jiao, L., Wu, Y., Fang, K., & Liu, X. (2023). Typo-morphological approaches for maintaining the sustainability of local traditional culture: A case study of the Damazhan and Xiaomazhan historical area in Guangzhou. *Buildings*, *13*(9), Article 2351. https://doi.org/10.3390/buildings13092351

John, H. (2019). *Biblical interpretation and African traditional religion*. Brill.

Kaiser, K. (2009). Protecting respondent confidentiality in qualitative research. *Qualitative Health Research*, *19*(11), 1632–1641. https://doi.org/10.1177/1049732309350879

Kakwambi, J. (2021). *Evaluating the self-help housing programme in Namibia: The case of Build Together Programme in Okahao Town* [Master's thesis, University of the Free State]. KovsiScholar.

Kamalipour, H., & Peimani, N. (2015). Assemblage thinking and the city: Implications for urban studies. *Current Urban Studies*, *3*(4), 402–408. https://doi.org/10.4236/cus.2015.34031

Kamati, K. N. (2019). *An analysis of macroeconomic determinants of house price volatility in Namibia* [Master's thesis, University of Namibia]. UNAM Scholarly Repository.

Karimi, P. (2013). *Domesticity and consumer culture in Iran: Interior revolutions of the modern era*. Routledge.

Kaupitwa, N. J. (2007). *An assessment of the assigned fiscal revenue instruments to local authorities in Namibia* [Master's thesis, University of Namibia]. UNAM Scholarly Repository. http://hdl.handle.net/11070/346

Kinahan, J. (2023). Archaeology of the last two thousand years in Namibia. In *Oxford research encyclopedia of African history*. Oxford University Press. https://doi.org/10.1093/acrefore/9780190277734.013.764

Kinchin, I. M., & Gravett, K. (2020). Concept mapping in the age of Deleuze: Fresh perspectives and new challenges. *Education Sciences*, *10*(3), Article 82. https://doi.org/10.3390/educsci10030082

Kjæret, K., & Stokke, K. (2003). Rehoboth Baster, Namibian or Namibian Baster? An analysis of national discourses in Rehoboth, Namibia. *Nations and Nationalism*, *9*(4), 579–600. https://doi.org/10.1111/1469-8219.00128

Klopp, J. M., & Ngau, P. M. (2020). Urban planning and social justice in Nairobi, Kenya. *International Planning Studies*, *25*(1), 105–119.

Kohima, J. M., Chigbu, U. E., Mazambani, M. L., & Mabakeng, M. R. (2023). (Neo-)segregation, (neo-)racism, and one-city two-system planning in Windhoek, Namibia: What can a new national urban policy do? *Land Use Policy*, *125*, Article 106480. https://doi.org/10.1016/j.landusepol.2022.106480

Kreike, E. (2010). *Deforestation and reforestation in Namibia: The global consequences of local contradictions*. Brill.

Larsson, A. (1993). The importance of housing in the lives of women: The case of Botswana. In H. Dandekar (Ed.), *Shelter, women, and development: First and third world perspectives* (pp. 106–115). George Wahr Publishing.

Latour, B. (2005). *Reassembling the social: An introduction to actor-network-theory*. Oxford University Press.

Law, J. (2004). *After method: Mess in social science research*. Routledge.

Lawlor, M. C. (2000). Learning from stories: Narrative interviewing in cross-cultural research. *Scandinavian Journal of Occupational Therapy*, *7*(1), 4–14. https://doi.org/10.1080/110381200443571

Le Corbusier. (1946). *Towards a new architecture* (F. Etchells, Trans.). Architectural Press. (Original work published 1923)

Lefebvre, H. (1991). *The production of space* (D. Nicholson-Smith, Trans.). Blackwell. (Original work published 1974)

Legal Assistance Centre. (2017). *Regional and local government*.

Legal Assistance Centre. (2022). *NAMLEX: Index to the laws of Namibia*. https://www.lac.org.na/index.php/laws/namlex/

Lendvay, M. (2018). *Community resilience and agency within the rural assemblage* [Doctoral dissertation, Newcastle University]. Newcastle University ePrints. ncl.ac.uk

Local Authorities Act 23 of 1992. (1992). *Government Gazette of the Republic of Namibia*, (470).

Loeb, E. M. (1962). *In feudal Africa* (Indiana University Research Center in Anthropology, Folklore, and Linguistics Publication 23). Indiana University.

Luhl, P. (2020). *Decolonising the informal: Discourse, everyday life, and the politics of urbanisation in Windhoek, Namibia* [Doctoral dissertation, University of Westminster]. WestminsterResearch. westminster.ac.uk

Luhl, P., & Delgado, G. (2018). *Urban land reform in Namibia: Getting ready for Namibia's urban future* (Policy Paper No. 2). Integrated Land Management Institute, Namibia University of Science and Technology. https://ir.nust.na/xmlui/handle/10628/621

Mabogunje, A. L. (1990). Urban planning and the post-colonial state in Africa: A research overview. *African Studies Review*, *33*(2), 121–203. https://doi.org/10.2307/524471

Mäkelä, M., Nimkulrat, N., & Heikkinen, T. (2014). Editorial / Drawing as a research tool: Making and understanding in art and design practice. *Studies in Material Thinking*, *10*, 1–12.

Mapaure, C. (2009). Jurisprudential aspects of proclaiming towns in communal areas in Namibia. *Namibia Law Journal*, *1*(2), 23–48.

Martella, F. (2019, September 10). *The domestic city: Expansion of the role of domesticity in the contemporary urban context: A new relationship between man and city*. urbanNext. https://urbannext.net/the-domestic-city/

Martin, C., & Hohn, J. (2020). *Ethnographic vignettes: Social change and social encounters in Solwezi, Northwestern Zambia* (Basel Papers on Political Transformations No. 20–21). University of Basel.

Massey, D. (1994). *Space, place, and gender*. University of Minnesota Press.

Mazambani, M., & Chigbu, U. E. (2023). Insecurity-generating features in the communal land system in Namibia: Interventions for good governance of tenure. *Land*, *12*(10), Article 1883. doi.org

Mbembe, A. (2001). *On the postcolony*. University of California Press. http://www.jstor.org/stable/10.1525/j.ctt1ppkxs

McFarlane, C. (2011a). Assemblage and critical urbanism. *City*, *15*(2), 204–224. https://doi.org/10.1080/13604813.2011.568715

McFarlane, C. (2011b). The city as assemblage: Dwelling and urban space. *Environment and Planning D: Society and Space*, *29*(4), 649–671. https://doi.org/10.1068/d4710

McGuirk, P. M., Mee, K., & Ruming, K. J. (2016). *Assembling urban regeneration: Resourcing critical generative accounts of urban regeneration through assemblage*. University of Wollongong. http://ro.uow.edu.au/sspapers/2210

Melber, H. (2019). Colonialism, land, ethnicity, and class: Namibia after the second national land conference. *Africa Spectrum*, *54*(1), 73–86. doi.org

Melber, H., & Saunders, C. (2007). Conflict mediation in decolonisation: Namibia's transition to independence. *Afrika Spectrum*, *42*(1), 73–94.

Mendelsohn, J. M. (2006). *Farming systems in Namibia*. RAISON.

Mendelsohn, J. M. (2008). Customary and legislative aspects of land registration and management on communal land in Namibia. Report for Ministry of Lands and Resettlement. landportal.org

Mendelsohn, J., & Nghitevelekwa, R. (2017). *An enquiry into land markets in Namibia's communal areas*. Namibia University of Science and Technology.

Menestrey Schwieger, D. A., & Mbidzo, M. (2020). Socio-historical and structural factors linked to land degradation and desertification in Namibia's former Herero "homelands". *Journal of Arid Environments*, *178*, Article 104151. https://doi.org/10.1016/j.jaridenv.2020.104151

Mhiripiri, N. A., Tomaselli, K., & Grant, J. (2024). Articulation and recognition of San firstness in Southern Africa and the contestation over citizenship. In *Oxford research encyclopedia of communication*. Oxford University Press. https://doi.org/10.1093/acrefore/9780190228613.013.1337

Mignolo, W. D. (2005). *The idea of Latin America*. Blackwell.

Mills, G. (1984). An inquiry into the structure and function of space in indigenous settlement in Ovamboland. *School of Architecture*, *85*, 33–35.

Mills, G. T. (1986). *The social meaning of domestic space: Notes on a suitable research methodology for Southern African architectural studies* [Master's thesis, University of Cape Town].

Ministry of Land Reform. (2018, October). *Resolutions of the second National Land Conference, 1 to 5 October 2018*. Government of the Republic of Namibia. http://dna.nust.na/landconference/submissions_2018/Resolutions_2nd_National_Land_Conference_2018.pdf

Ministry of Lands, Resettlement and Rehabilitation. (1998). *National land policy*. Republic of Namibia.

Ministry of Regional and Local Government and Housing. (1991). *National housing policy*. Republic of Namibia.

Ministry of Regional and Local Government, Housing and Rural Development. (2009). *National housing policy* (revised). Government of Namibia.

Ministry of Urban and Rural Development. (2015, October 28). *Response to concerns raised by Honourable Members of the National Assembly* [Tabled document]. Parliament of the Republic of Namibia. https://parliament.na/wp-content/uploads/2021/08/Min.-Urban-rural-dev-speech-on-28-10-2015.pdf

Ministry of Urban and Rural Development. (2023). *National housing policy* (second revision). Government of Namibia. https://murd.gov.na/legislation

Mohlman, K. (1998). Conceptualizing Philippine domesticity in the context of urbanization: Chronicle of a home-based workshop. *Philippine Sociological Review*, *46*(3/4), 72–87. http://www.jstor.org/stable/23898233

Moser, C. O. N. (2009). *Ordinary families, extraordinary lives: Assets and poverty reduction in Guayaquil, 1978–2004*. Brookings Institution Press.

Mould, O. (2016). A limitless urban theory? A response to Scott and Storper's 'The nature of cities: The scope and limits of urban theory'. *International Journal of Urban and Regional Research*, *40*(1), 157–163. https://doi.org/10.1111/1468-2427.12288

Muller-Friedman, F. (2007). "Just build it modern": Post-apartheid reconstruction and the vernacular in Namibia. In S. J. Salm & T. Falola (Eds.), *African urban spaces in historical perspective* (pp. 313–332). University of Rochester Press.

Müller-Friedman, F. (2008). Toward a (post)apartheid architecture? A view from Namibia. *Planning Perspectives*, *23*(1), 29–48. https://doi.org/10.1080/02665430701738008

Müller, M. (2015). Assemblages and actor-networks: Rethinking socio-material power, politics and space. *Geography Compass*, *9*(1), 27–41. https://doi.org/10.1111/gec3.12192

Müller, M., & Schurr, C. (2016). Assemblage thinking and actor-network theory: Conjunctions, disjunctions, cross-fertilisations. *Transactions of the Institute of British Geographers*, *41*(3), 217–229. https://doi.org/10.1111/tran.12117

Muminovic, M. (2019). Place as assemblage: Abstracting, diagramming and mapping. *Athens Journal of Architecture*, *5*(1), 61–76. https://doi.org/10.30958/aja.5-1-3

Mundia, K. F., & Haimbili, R. (2023). The intricacies of land reform in Namibia: An overview of the land question in Namibia 33 years after independence. *Potchefstroom Electronic Law Journal*, *26*. https://doi.org/10.17159/1727-3781/2023/v26i0a14715

Murray, M. J. (2008). *Taming the disorderly city: The spatial landscape of Johannesburg after apartheid*. Cornell University Press.

Murray, M. J., & Myers, G. A. (2006). *Cities in contemporary Africa*. Palgrave Macmillan.

Myers, G. A. (2011). *African cities: Alternative visions of urban theory and practice*. Zed Books.

Nail, T. (2017). What is an assemblage? *SubStance*, *46*(1), 21–37.

Namibian Sun. (2011, September 1). Oshikuku gains town status. *Namibian Sun*.

Namibia Statistics Agency. (2014). *Namibia 2011 population and housing census: Omusati regional profile*.

National Archives of Namibia. (1937). *Ovamboland 1937* [Map]. (Maps collection, H 13). National Archives of Namibia, Windhoek, Namibia.

Ndinda, C. (2009). 'But now I dream about my house': Women's empowerment and housing delivery in urban KwaZulu-Natal, South Africa. *Development Southern Africa*, *26*(2), 317–333. https://doi.org/10.1080/03768350902899660

Ndlovu-Gatsheni, S. J. (2018). *Epistemic freedom in Africa: Deprovincialization and decolonization*. Routledge.

New Era. (2024, July 4). Mayor highlights ongoing growth. *New Era*. neweralive.na

Nghitevelekwa, R. V. (2022). The future of communal lands in Africa: Experiences from Namibia. In U. E. Chigbu (Ed.), *Land governance and gender: The tenure–gender nexus in land management and land administration* (pp. 155–164). Brill. https://doi.org/10.1163/9789004471641_013

Oermann, N. O. (2013). [Review of the book *A history of Namibia: From the beginning to 1990*, by M. Wallace]. *African Historical Review*, *45*(1), 77–79. https://doi.org/10.1080/17532523.2013.796137

Okyere, S. A., Diko, S. K., Hiraoka, M., & Kita, M. (2017). An urban "mixity": Spatial dynamics of social interactions and human behaviors in the Abese informal quarter of La Dadekotopon, Ghana. *Urban Science*, *1*(2), Article 13. https://doi.org/10.3390/urbansci1020013

Okyere, S. A., & Kita, M. (2015). Rethinking urban informality and settlements growth in urban Africa: A literature discussion. *Journal of Sustainable Development in Africa*, *17*(6), 101–124.

Omusati Regional Council. (2018). *Omusati regional profile*.

Park, R. E., Burgess, E. W., & McKenzie, R. D. (1925). *The city*. University of Chicago Press.

Parnell, S., & Pieterse, E. (Eds.). (2014). *Africa's urban revolution*. Zed Books.

Pendleton, W., Crush, J., & Nickanor, N. (2014). Migrant Windhoek: Rural-urban migration and food security in Namibia. *Urban Forum*, *25*(2), 191–205. https://doi.org/10.1007/s12132-014-9220-x

Pieterse, E. (2008). *City futures: Confronting the crisis of urban development*. Zed Books.

Pieterse, E. (2009). *Exploratory notes on African urbanism* (Occasional Paper No. 1). African Centre for Cities.

Pieterse, E. (2010). Cityness and African urban development. *Urban Forum*, *21*(3), 205–219. https://doi.org/10.1007/s12132-010-9092-7

Pieterse, E. (2011). Grasping the unknowable: Coming to grips with African urbanisms. *Social Dynamics*, *37*(1), 5–23. https://doi.org/10.1080/02533952.2011.569994

Pieterse, E. (2014). Filling the void: An agenda for tackling African urbanisation. In S. Parnell & E. Pieterse (Eds.), *Africa's urban revolution* (pp. xx–xx). Zed Books.

Rankin, K. N. (2011). Assemblage and the politics of thick description. *City*, *15*(5), 563–569. https://doi.org/10.1080/13604813.2011.611287

Rapoport, A. (1969). *House form and culture*. Prentice-Hall.

Regional Councils Act 22 of 1992. (1992). *Government Gazette of the Republic of Namibia*, (469).

Resnik, D. B. (2018). *The ethics of research with human subjects: Protecting people, advancing science, promoting trust*. Springer.

Rich, H. (1984). Ethical guidelines. *The American Statistician*, *38*(2), 160. https://doi.org/10.1080/00031305.1984.10483191

Robinson, J. (2006). *Ordinary cities: Between modernity and development*. Routledge.

Roland, S., Stevens, Q., & Simon, K. (2024). The uncanny capital: Mapping the historical spatial evolution of Windhoek. *Urban Forum*, *35*(1), 121–145. https://doi.org/10.1007/s12132-023-09484-0

Roy, A. (2005). Urban informality: Toward an epistemology of planning. *Journal of the American Planning Association*, *71*(2), 147–158.

Roy, A. (2009). Why India cannot plan its cities: Informality, insurgence and the idiom of urbanization. *Planning Theory*, *8*(1), 76–87.

Roy, A. (2011). Slumdog cities: Rethinking subaltern urbanism. *International Journal of Urban and Regional Research*, *35*(2), 223–238.

Rudofsky, B. (1964). *Architecture without architects: A short introduction to non-pedigreed architecture*. Doubleday.

Rudolph, M. M. (2024). The labour migration of the Ovambo workers to the diamond fields in German South West Africa. *Esboços: Histórias em Contextos Globais*, *31*(57), 220–236. https://doi.org/10.5007/2175-7976.2024.e98478

Rutzou, T., & Elder-Vass, D. (2019). On assemblages and things. *Sociological Theory*, *37*(4), 401–424.

Salokoski, M. (2006). *How kings are made, how kingship changes: A study of rituals and ritual change in pre-colonial and colonial Owamboland, Namibia* [Doctoral dissertation, University of Helsinki]. Helsinki University Press.

Saylan, S., & Gürer, T. K. (2024). Typomorphology: A methodological approach to context analysis in architectural design education. *ICONARP International Journal of Architecture and Planning*, *12*(1), 271–291. https://doi.org/10.15320/ICONARP.2024.281

Schindler, S. (2017). Towards a paradigm of Southern urbanism. *City*, *21*(1), 47–64. https://doi.org/10.1080/13604813.2016.1263494

Sendra, P. (2015). Rethinking urban public space: Assemblage thinking and the uses of disorder. *City*, *19*(6), 820–836. https://doi.org/10.1080/13604813.2015.1090184

Shack Dwellers Federation of Namibia & Namibia Housing Action Group. (2023). *Annual report 2022–2023*. https://www.civic264.org.na/images/pdf/2024/7/2022 2023_Annual_Report_SDFNNHAG.pdf

Shigwedha, V. A. (2004). *The pre-colonial costumes of the Aawambo: Significant changes under colonialism and the construction of post-colonial identity* [Master's thesis, University of Namibia]. UNAM Scholarly Repository.

Shiimi, I. (2011, May 3). *Enhancing access to finance in Namibia through an improved land tenure system* [Address by the Governor of the Bank of Namibia]. Bank of Namibia.

Shilongo, L. (2010). *The Namibian government's compensation policy on occupiers of communal land and its implication in the context of administrative law* [Bachelor of Laws dissertation, University of Namibia]. UNAM Digital Repository. http://hdl.handle.net/11070.1/5264

Shivute, K. (2021). *The history of Aambaanhu: "The revolution of the people's palace"* [Independent research].

Shivute, O., & Vries, D. (2011, March 17). Helao Nafidi – a problematic town of many villages. *The Namibian*. https://www.namibian.com.na/helao-nafidi-a-problematic-town-of-many-villages/

Siddle, A. (2019). *Namibia* [Country brief]. Swedish International Centre for Local Democracy. https://cdn.icld.se/wp-content/uploads/20250922111117/Namibia-.pdf

Silberfein, M. (Ed.). (2019). *Rural settlement structure and African development*. Routledge. (Original work published 1998). https://doi.org/10.4324/9780429305146

Silver, J. (2014). Incremental infrastructures: Material improvisation and social collaboration across post-colonial Accra. *Urban Geography*, *35*(6), 788–804. https://doi.org/10.1080/02723638.2014.933605

Simon, D. (1985). Decolonisation and local government in Namibia: The neo-apartheid plan, 1977–83. *The Journal of Modern African Studies*, *23*(3), 507–526. https://doi.org/10.1017/S0022278X00057207

Simon, D. (1986). Desegregation in Namibia: The demise of urban apartheid? *Geoforum*, *17*(2), 289–307.

Simon, D. (1992). *Cities, capital and development: African cities in the world economy*. Belhaven Press.

Simon, D. (1996). Restructuring the local state in post-apartheid cities: Namibian experience and lessons for South Africa. In R. Davies (Ed.), *Contemporary city structuring* (pp. 368–401). International Geographical Union Commission on Urban Development and Urban Life.

Simone, A. M. (2004). *For the city yet to come: Changing African life in four cities*. Duke University Press.

Simone, A. M. (2010). *City life from Jakarta to Dakar: Movements at the crossroads*. Routledge.

Simone, A. M. (2011). The surfacing of urban life: A response to Colin McFarlane and Neil Brenner, David Madden and David Wachsmuth. *City*, *15*(3–4), 355–364. https://doi.org/10.1080/13604813.2011.595108

Simone, A. M., & Pieterse, E. A. (2017). *New urban worlds: Inhabiting dissonant times*. Polity Press.

Springer, M. (2024). *Enacting architectural tools to valorize historical palimpsests*. Springer Nature.

Stanley, C. S. (2007). *Traditional governance and recognition: Why is it still eluding the Rehoboth Baster seventeen years after independence?* [Bachelor of Laws dissertation, University of Namibia]. UNAM Digital Repository. https://digital.unam.edu.na/xmlui/bitstream/handle/11070.1/5006/stanley2007.pdf

Steyn, G., & Roodt, A. (2003). Two traditional African settlements – context and configuration. *South African Journal of Art History*, *18*(1), 195–209. https://www.academia.edu/85516517/Two_traditional_African_settlements_context_and_configuration

Stojanovski, T. (2019). Swedish typo-morphology – morphological conceptualizations and implication for urban design. *ICONARP International Journal of Architecture and Planning*, *7*(Special Issue), 135–157. https://doi.org/10.15320/ICONARP.2019.81

Storper, M., & Scott, A. J. (2016). Current debates in urban theory: A critical assessment. *Urban Studies*, *53*(6), 1114–1136. https://doi.org/10.1177/0042098016634002

Suzman, J. (2001). *An assessment of the status of the San in Namibia*. Legal Assistance Centre. lac.org.na

Swanton, D. (2011). Assemblage and critical urban praxis: Part two: Introduction. *City*, *15*(3–4), 343–346. https://doi.org/10.1080/13604813.2011.610153

The Namibian. (2020, March 17). *DBN provides grant for Nkurenkuru extension*. https://www.namibian.com.na/dbn-provides-grant-for-nkurenkuru-extension/

Tolich, M. (2004). Internal confidentiality: When confidentiality assurances fail relational informants. *Qualitative Sociology*, *27*(1), 101–106. https://doi.org/10.1023/B:QUAS.0000015546.20441.4a

Town and Regional Planners Act 9 of 1996. (1996). *Government Gazette of the Republic of Namibia*, (1354).

Traditional Authorities Act 25 of 2000. (2000). *Government Gazette of the Republic of Namibia*, (2456).

University of Cape Town. (2006). *Guide to research ethics: Research on human subjects*.

Urban and Regional Planning Act 5 of 2018. (2018). *Government Gazette of the Republic of Namibia*, (6631).

Vaismoradi, M., Jones, J., Turunen, H., & Snelgrove, S. (2016). Theme development in qualitative content analysis and thematic analysis. *Journal of Nursing Education and Practice*, *6*(5), 100–110. https://doi.org/10.5430/jnep.v6n5p100

Wachsmuth, D., Madden, D. J., & Brenner, N. (2011). Between abstraction and complexity. *City*, *15*(6), 740–750. https://doi.org/10.1080/13604813.2011.632903

Wallace, M. (2011). *A history of Namibia: From the beginning to 1990*. Oxford University Press.

Weber, B., & Mendelsohn, J. (2017). *Informal settlements in Namibia: Their nature and growth*. Development Workshop Namibia.

Weiss, R. S. (1994). *Learning from strangers: The art and method of qualitative interview studies*. Free Press.

Werner, W. (1993). A brief history of land dispossession in Namibia. *Journal of Southern African Studies*, *19*(1), 135–146. https://doi.org/10.1080/03057079308708351

Werner, W. (2011). *Policy brief: Elite land grabbing in Namibian communal areas and its effects on subsistence farmers*. Legal Assistance Centre. https://www.lac.org.na/projects/lead/Pdf/landgrabbing.pdf

Werner, W. (2015). *25 years of land reform* (Research Report No. 16). Legal Assistance Centre.

Werner, W. (2021). *Land governance on communal land in Namibia*. Legal Assistance Centre.

Werner, W., & Bayer, C.-T. (2016). *Leasehold as a vehicle for economic development: A case study of small-scale farmers in Namibia's Oshikoto Region*. Legal Assistance Centre.

Wood, S. (2009). Desiring docklands: Deleuze and urban planning discourse. *Planning Theory*, *8*(2), 191–216. https://doi.org/10.1177/1473095209102234

Woods, M. (2014). Territorialisation and the assemblage of rural place: Examples from Canada and New Zealand. In P. J. Cullerton (Ed.), *Rural change and sustainability* (pp. 43–60). Routledge.

Wright, G. (1991). Prescribing the model home. *Social Research*, *58*(1), 213–225. http://www.jstor.org/stable/40970641

Yiran, G. A. B., Ablo, A. D., Asem, F. E., & Owusu, G. (2020). Urban sprawl in sub-Saharan Africa: A review of the literature in selected countries. *Ghana Journal of Geography*, *12*(1), 1–28. https://doi.org/10.4314/gjg.v12i1.1

Zimmer, A., Guido, Z., Davies, J., Joshi, N., Chilenga, A., & Evans, T. (2022). Food systems and rural-urban linkages in African secondary cities. *Urban Transformations*, *4*(1), Article 13. https://doi.org/10.1186/s42854-022-00042-8

Appendices

MAP 1: LOCAL AUTHORITY SCHEME BOUNDARY

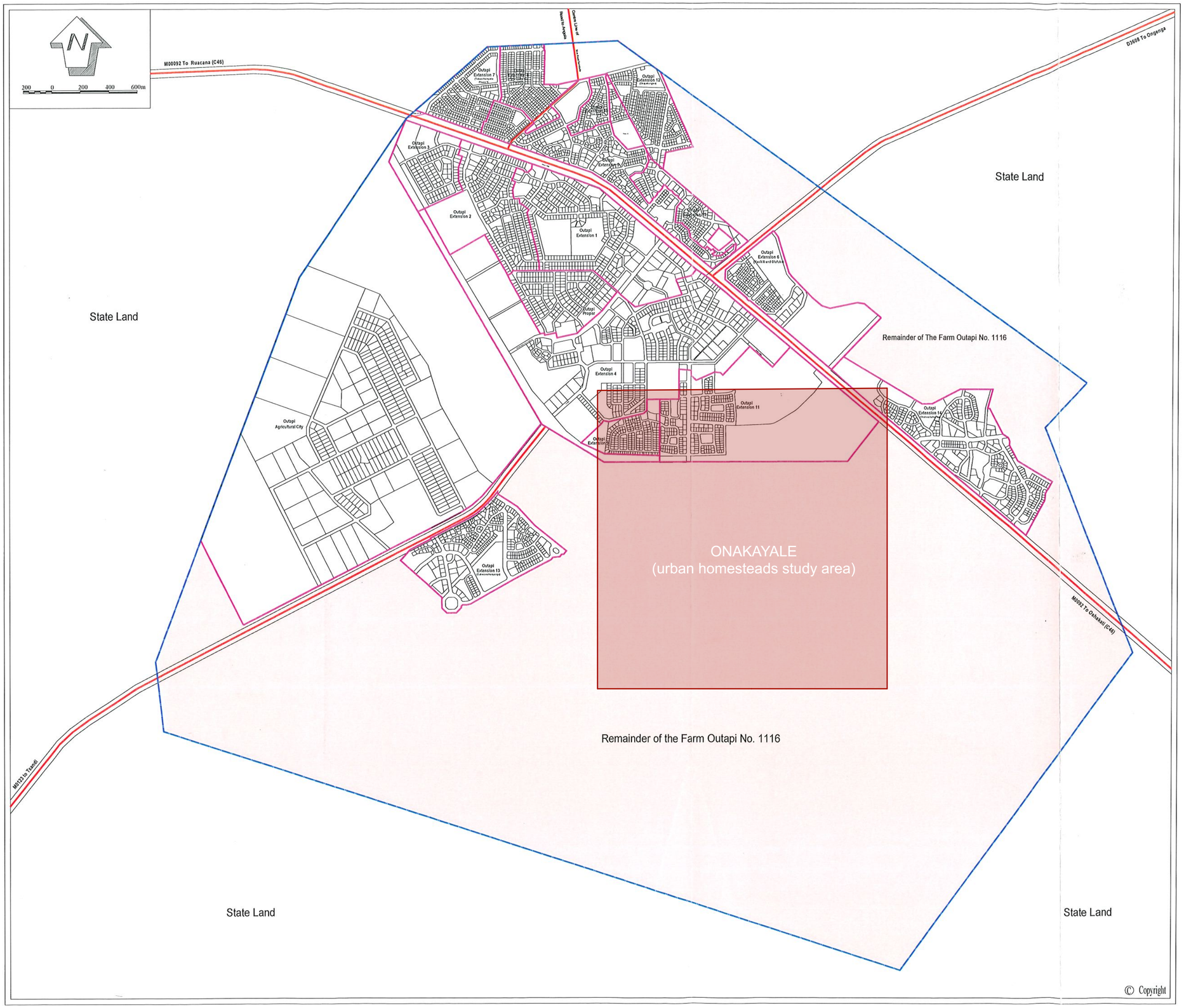

OUTAPI TOWN COUNCIL

OUTAPI

REFERENCE:

Reference

- Local Authority/Scheme Boundary
- Extension Boundary
- Cadastral Boundary
- Future Development
- Digitised Road Centre Line

All measurements & sizes given are approximate.
No Residential erf shall be smaller that 300m² in size.
NOTE:

Stubenrauch Planning Consultants SPC

STUBENRAUCH
PLANNING CONSULTANTS
TOWN AND REGIONAL PLANNERS
po box 11869 tel: 061-251189
windhoek tel: 061-252490
namibia fax: 061-252157
e-mail: spc@spc.iway.na

Clients approval:

SIGNATURE DATE

PROJECT TITLE:

OUTAPI
RESOLUTION MAP

DRAWN:	CHECKED:	DRAWING NO:
ES		W/11050 - 1
SCALE: 1: 25 000	DATE: November 2012	

MAP 2: LOCAL AUTHORITY SCHEME ZONING SCHEME

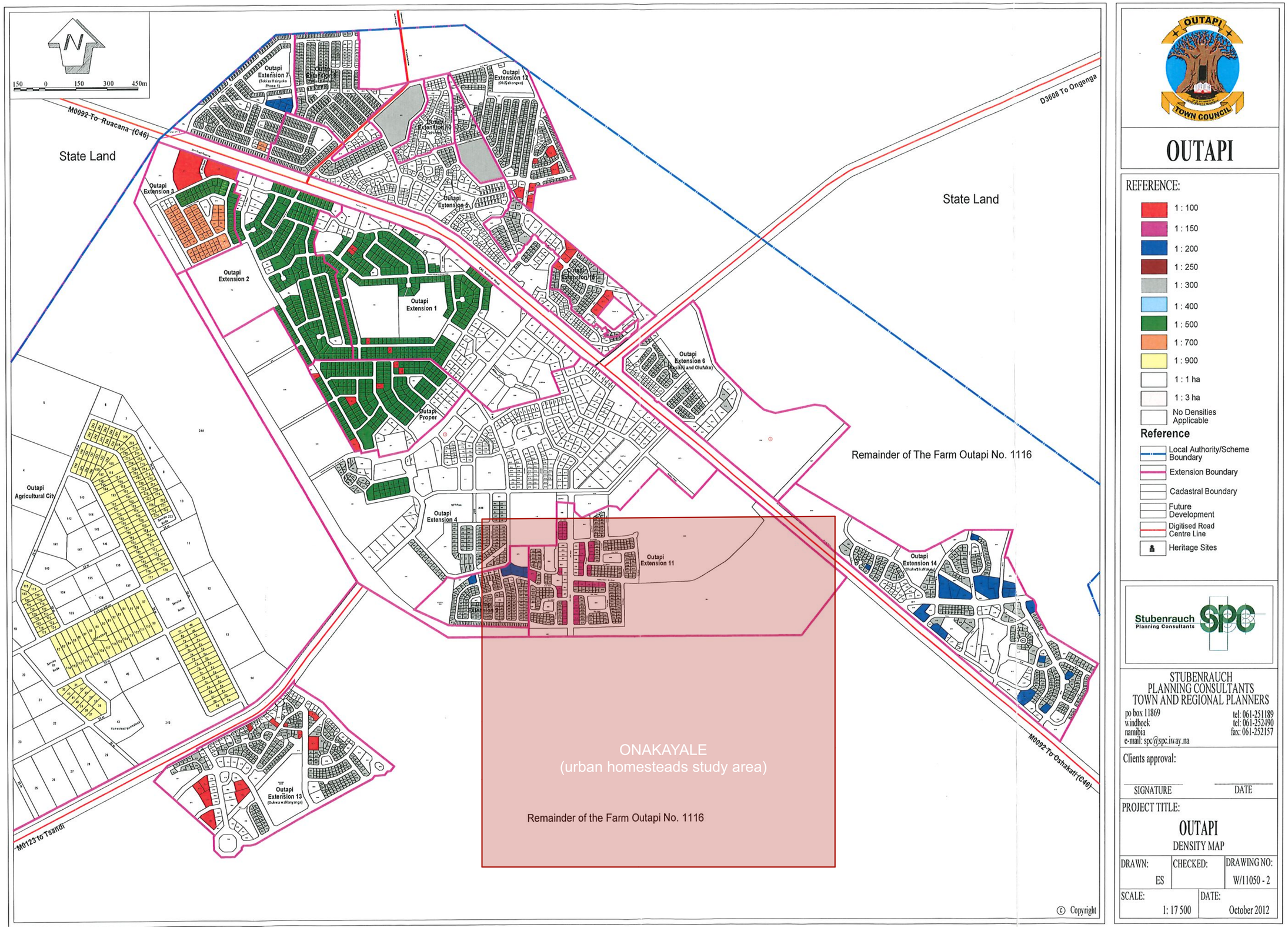

OUTAPI TOWN COUNCIL

OUTAPI

REFERENCE:

- 1 : 100
- 1 : 150
- 1 : 200
- 1 : 250
- 1 : 300
- 1 : 400
- 1 : 500
- 1 : 700
- 1 : 900
- 1 : 1 ha
- 1 : 3 ha
- No Densities Applicable

Reference

- Local Authority/Scheme Boundary
- Extension Boundary
- Cadastral Boundary
- Future Development
- Digitised Road Centre Line
- Heritage Sites

Stubenrauch Planning Consultants SPC

STUBENRAUCH
PLANNING CONSULTANTS
TOWN AND REGIONAL PLANNERS
po box 11869
windhoek
namibia
e-mail: spc@spc.iway.na
tel: 061-251189
tel: 061-252490
fax: 061-252157

Clients approval:

SIGNATURE DATE

PROJECT TITLE:

OUTAPI
DENSITY MAP

DRAWN:	CHECKED:	DRAWING NO:
ES		W/11050 - 2
SCALE: 1: 17 500	DATE: October 2012	

MAP 3: MORPHOLOGICAL OVERLAY – HOMESTEADS IN PROCLAIMED AREA PRE 2003



MAP 4: MORPHOLOGICAL OVERLAY – HOMESTEADS IN PROCLAIMED AREA PRE 2003 AND CADASTRAL LAYOUT POST 2013



TYPOMORPHOLOGICAL SURVEY ANALYSIS

(Cases presented in Chapter 5 are not referenced for anonymity)

Communal Homestead 1 (Visited by the researcher in person)

2003 2023





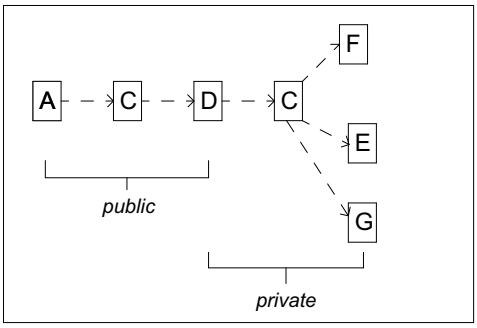

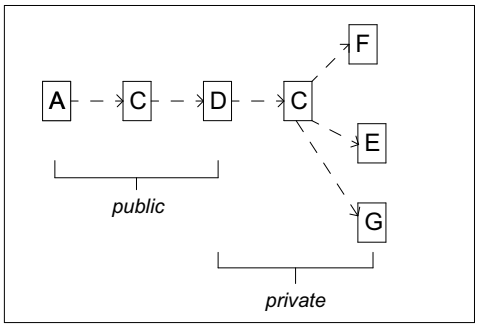

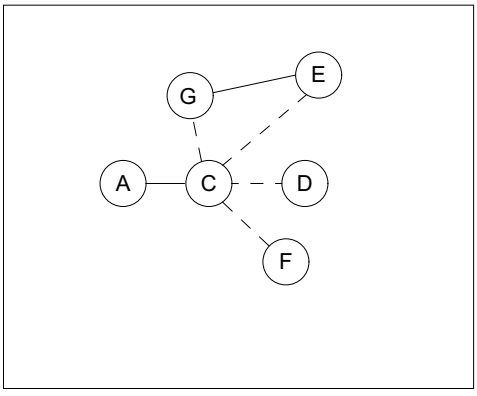

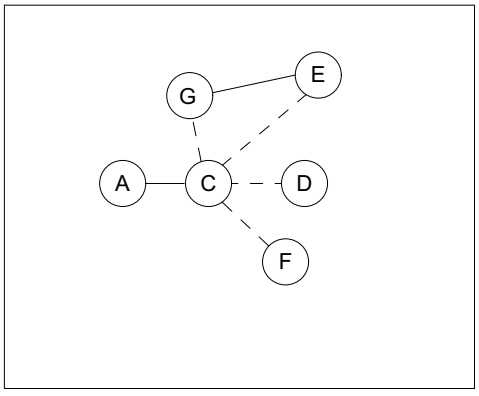

Summary of Changes

Smaller huts were replaced with fewer, larger buildings consisting of cellular rooms. The boundary wall material was upgraded from wooden sticks to cement bricks. The sequence from public spaces to private

spaces is maintained. Spatial relationships between areas such as the onu, epata, and oshoto spaces are preserved.

Communal Homestead 2 **(Only a aerial photo survey done)**

2003 2023





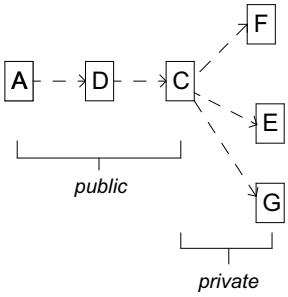

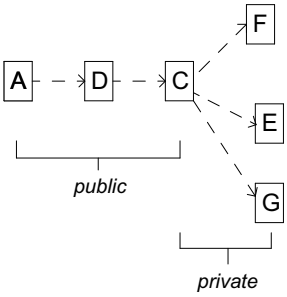

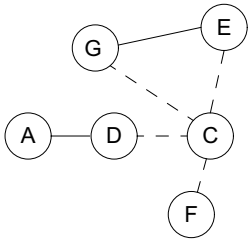

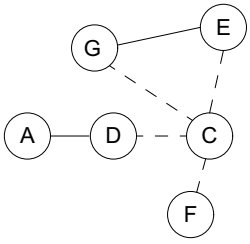

Summary of Changes

Smaller huts were replaced with buildings comprising cellular rooms. The boundary wall material was upgraded from wooden sticks to cement bricks. The sequence from public spaces to private spaces is maintained. Spatial relationships between spaces like the onu, epata, and oshoto are preserved.

Communal Homestead 3 **(Only a aerial photo survey done)**

2003 2023

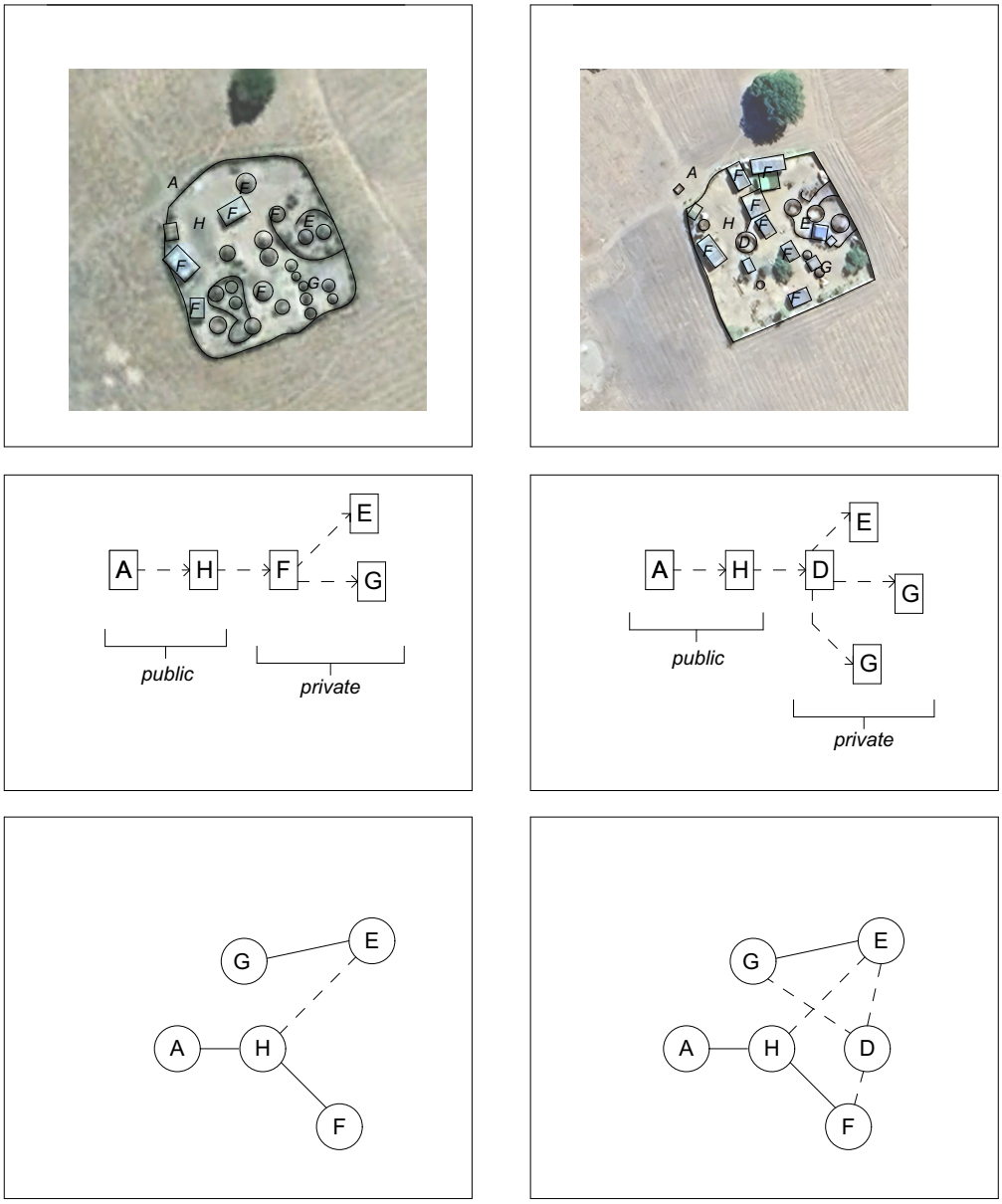

Summary of Changes

Smaller huts replaced many larger buildings. The boundary wall material was upgraded from wooden sticks to cement bricks. The spatial depth sequence from public spaces (onu) to private spaces is increased by the introduction of the oshoto space. Spatial relationships between spaces like the onu, epata, and oshoto are maintained, while new spatial links and relationships with the oshoto space are created.

Communal Homestead 4 **(Only a aerial photo survey done)**

2003 2023





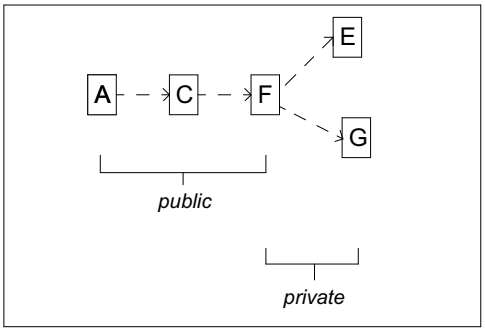

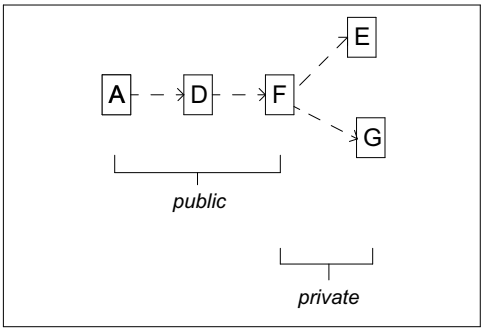

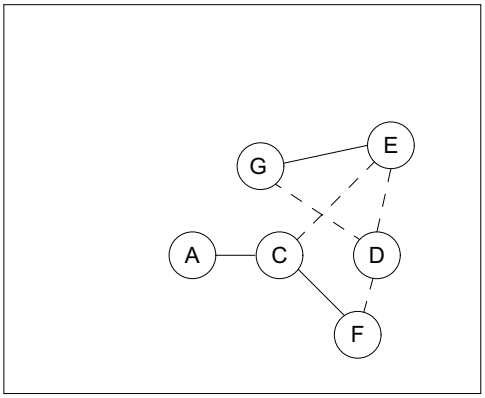

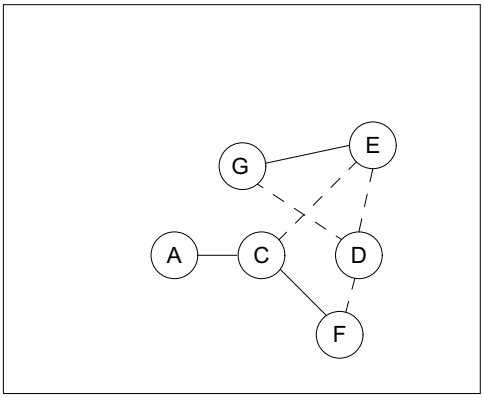

Summary of Changes

The boundary wall material was upgraded from wooden sticks to cement bricks. The sequence from public to private spaces is maintained. Spatial relationships between spaces such as the onu, epata, and oshoto are preserved.

Communal Homestead 5 (Aerial photo survey and visit done by researcher)

2003 2023

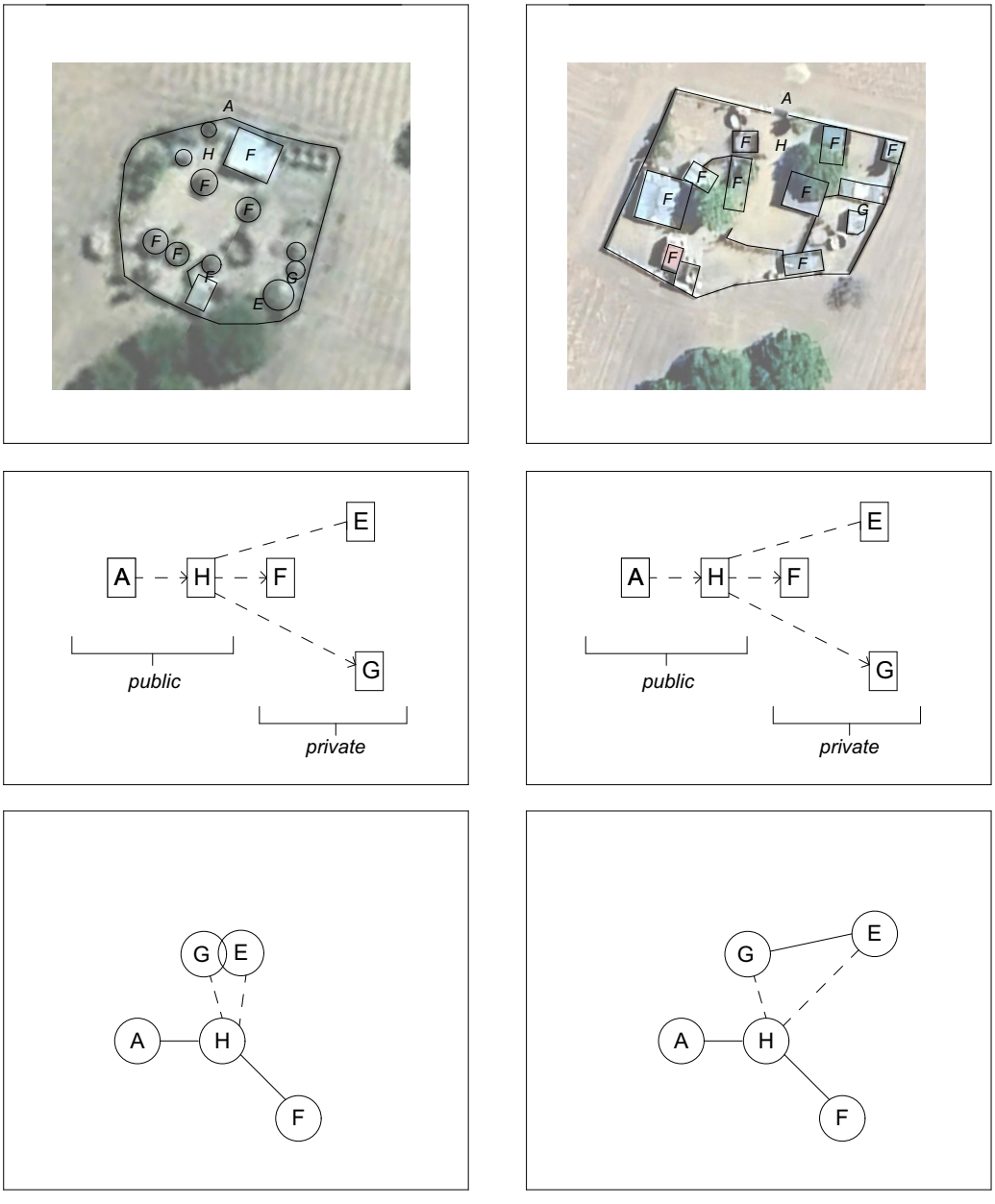

Summary of Changes

Smaller huts were replaced with fewer, larger buildings containing cellular rooms. The boundary wall material was upgraded from wooden sticks to cement bricks. The sequence from public spaces to private spaces is preserved (through the ehale space (H)). Spatial and proximity relationships between areas such

as the onu, epata, and oshoto spaces are maintained, with a weaker connection between storage rooms and epata due to the addition of a separate enclosed cooking room.

Communal Homestead 6 (Aerial photo survey and visit done by researcher)

2003 2023

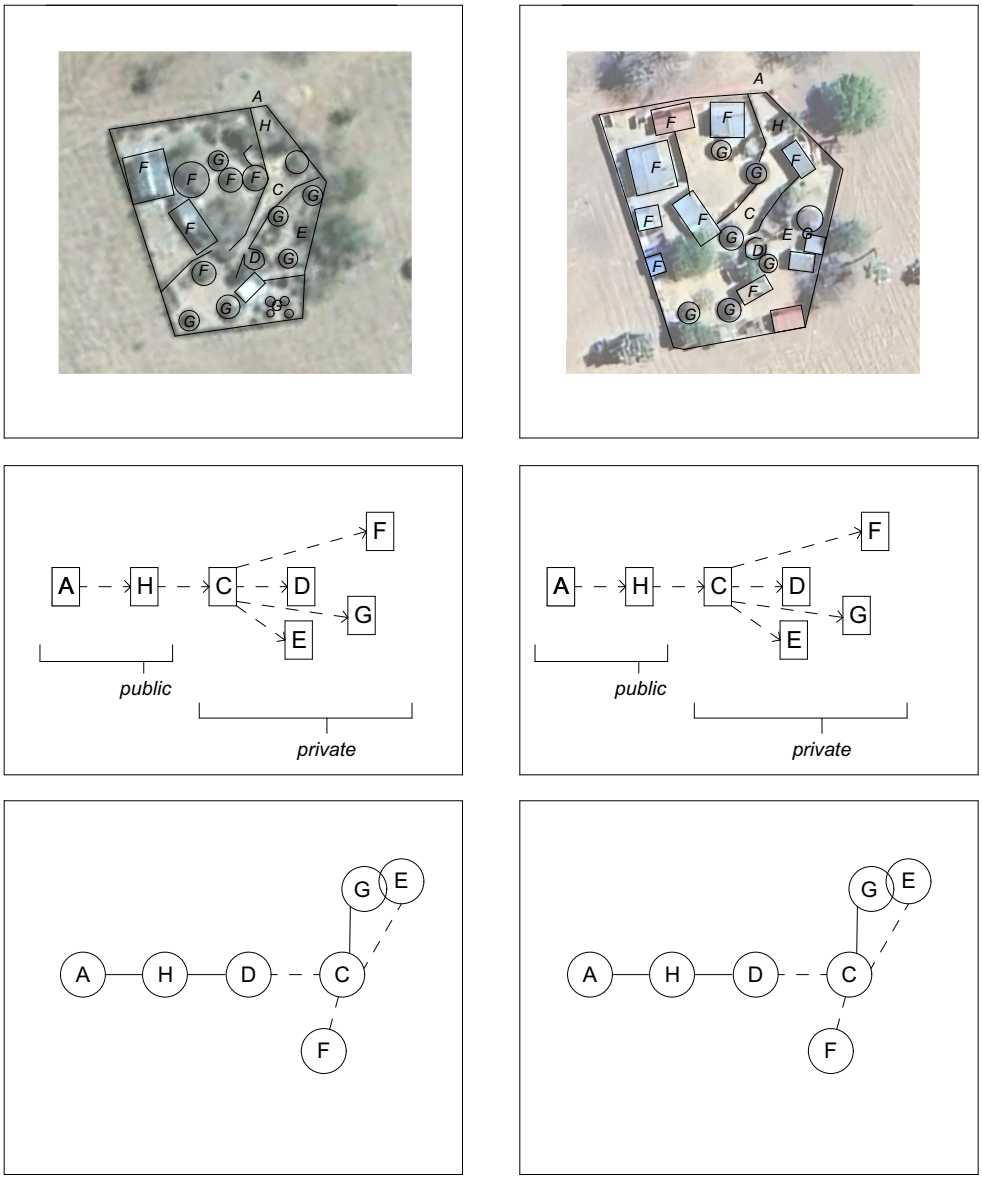

Summary of Changes

Some smaller huts were replaced with fewer, larger buildings comprising cellular rooms. Overall, the spatial layout of the homestead remained largely the same. The sequence from public spaces to private spaces is maintained. Spatial and proximity relationships between areas like the onu, epata, and oshoto spaces are preserved.

Communal Homestead 7

2003



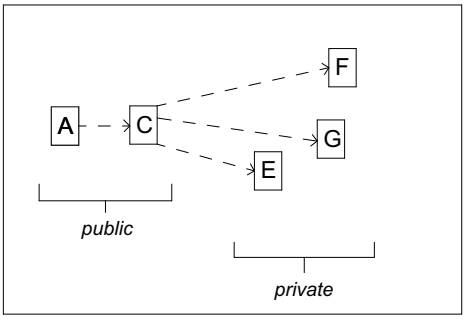

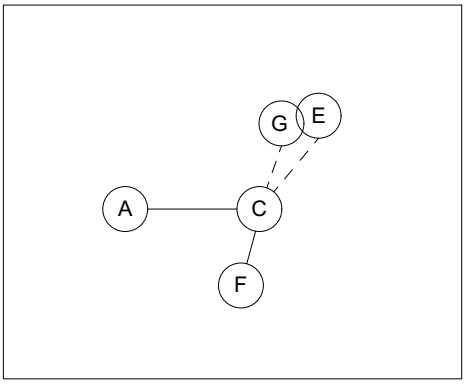

(Only a aerial photo survey done)

2023



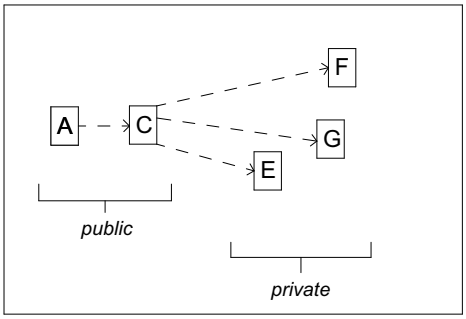

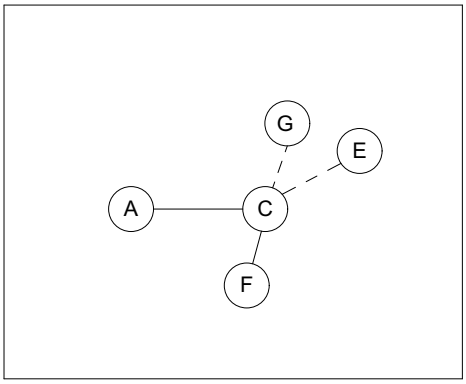

Summary of Changes

Smaller huts were replaced with fewer, larger buildings containing cellular rooms.

The sequence from public to private spaces is preserved.

Spatial and proximity relationships between spaces, such as the onu, epata, and oshoto spaces, are maintained.

Communal Homestead 8 **(Only a aerial photo survey done)**

2003 2023

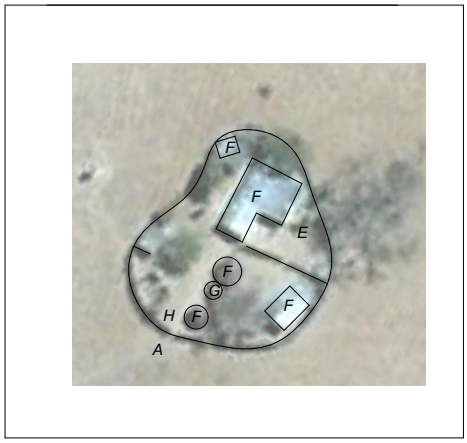



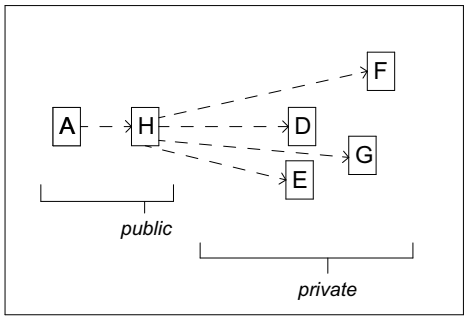

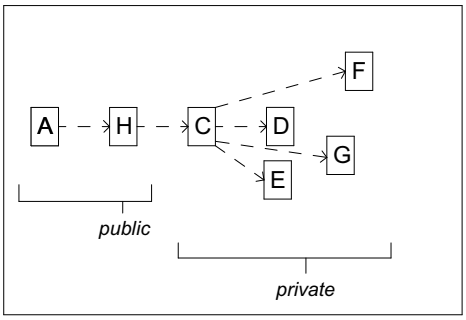

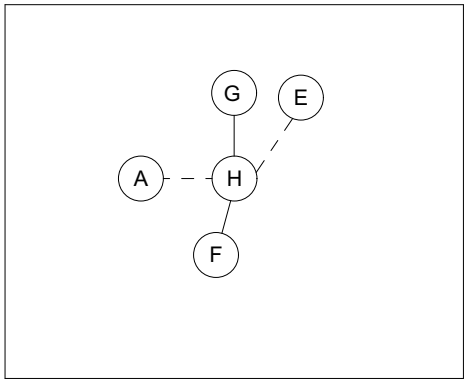

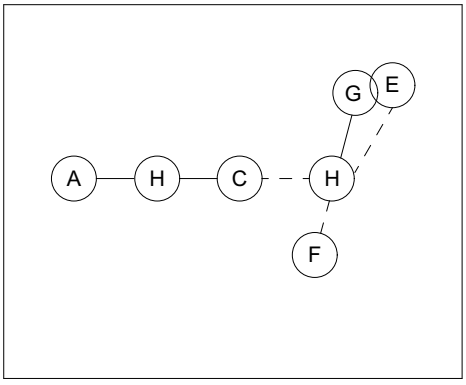

Summary of Changes

Some smaller huts were replaced with larger buildings comprising cellular rooms. Other smaller storage rooms were introduced.

The boundary wall material was upgraded from wooden sticks to cement bricks

Internal dividing palisade walls were introduced to introduce privacy and create negative/movement spaces like corridors

The sequence from public spaces to private spaces is increased with the introduction of a corridor. The epata space was maintained as the most private space

A new proximity relationship was created between the oshoto space and the rest of the more private spaces in the homestead.

Communal Homestead 9

2003

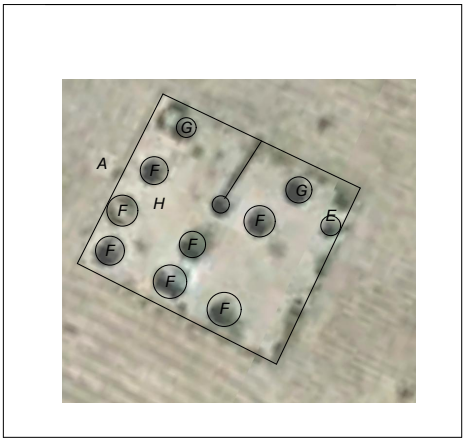

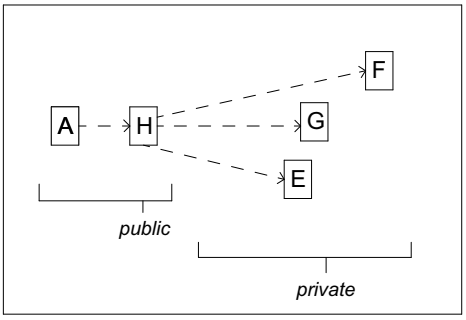

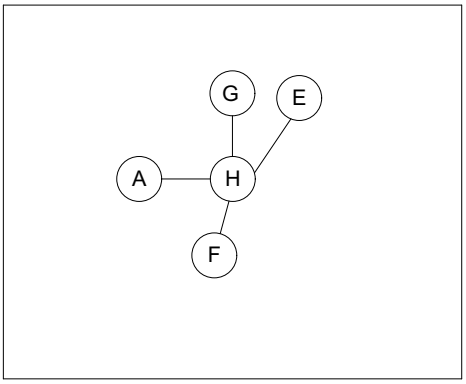

(Only a aerial photo survey done)

2023



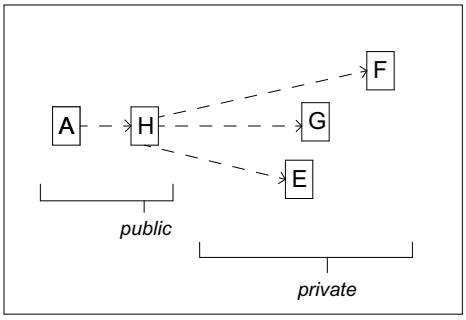

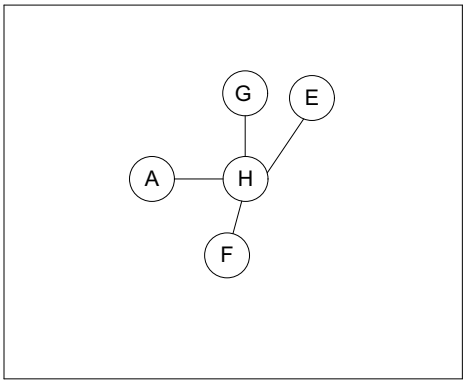

Summary of Changes

Some huts were replaced with larger buildings comprising cellular rooms. Few huts were kept for storage.

The boundary wall material was upgraded from wooden sticks to cement bricks

The sequence from public spaces to private spaces is maintained

Spatial relationships between spaces like the onu, epata and oshoto spaces are maintained

Communal Homestead 10 (Aerial photo survey and visit done by researcher)

2003 2023

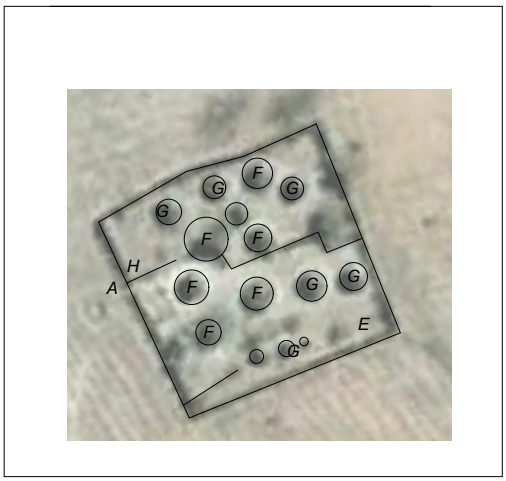



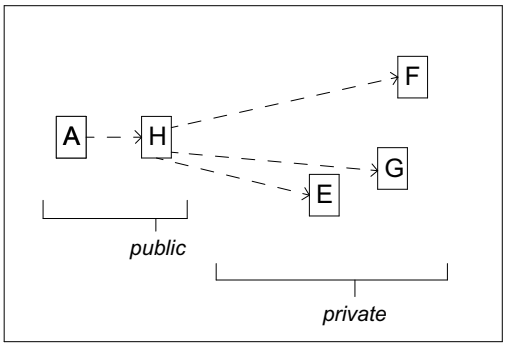

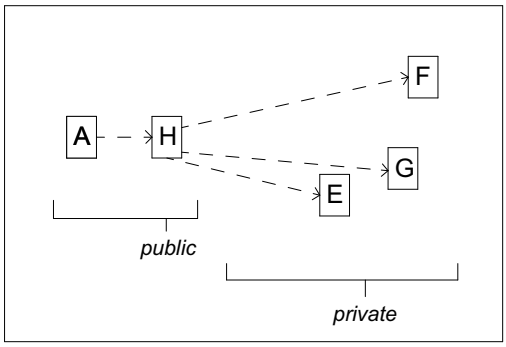

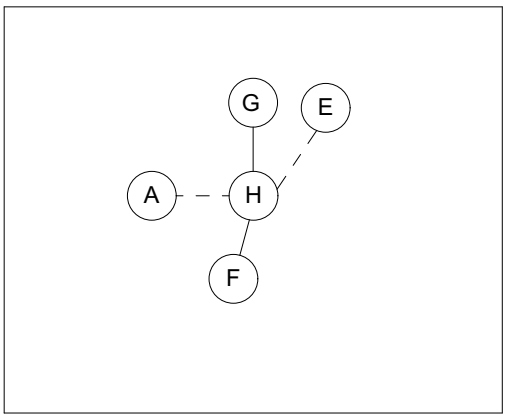

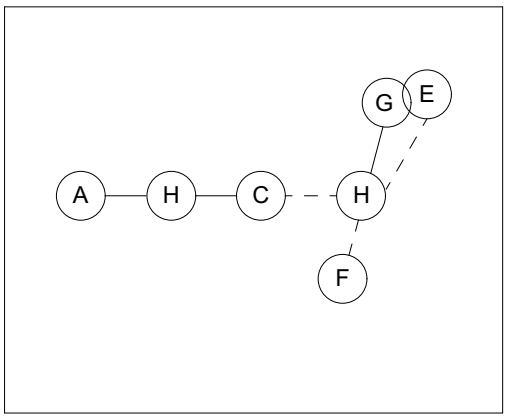

Summary of Changes

Some huts were replaced with larger buildings comprising cellular rooms. The sequence from public to private spaces is maintained. Spatial relationships between spaces like the onu, epata and oshoto are preserved.

Communal Homestead 11 (Aerial photo survey and visit done by researcher)

2003

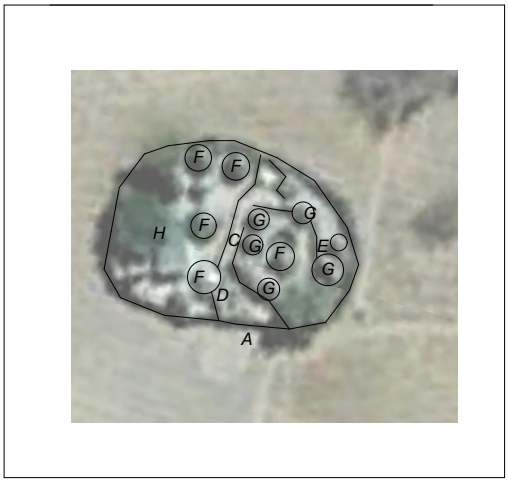

2023



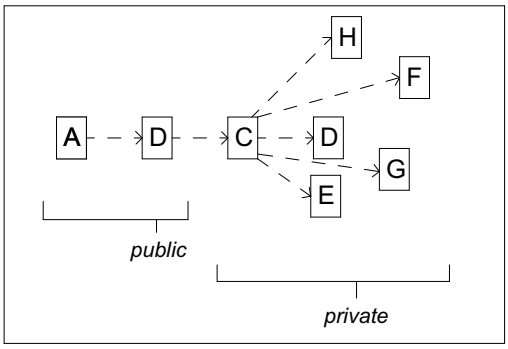

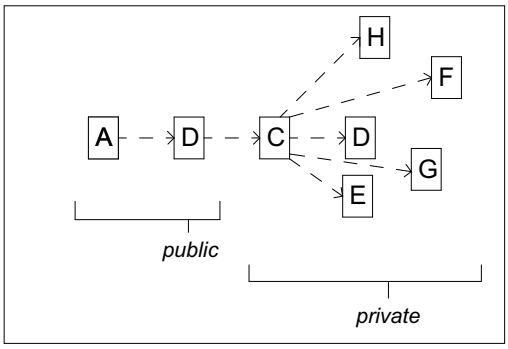

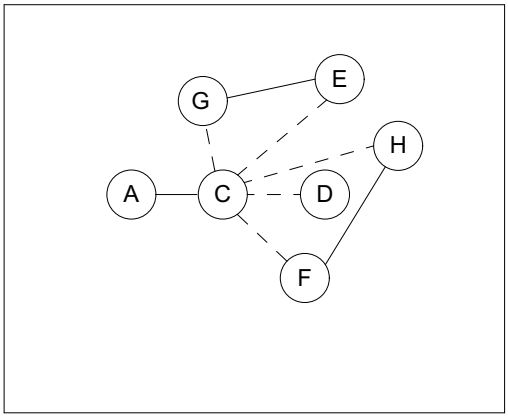

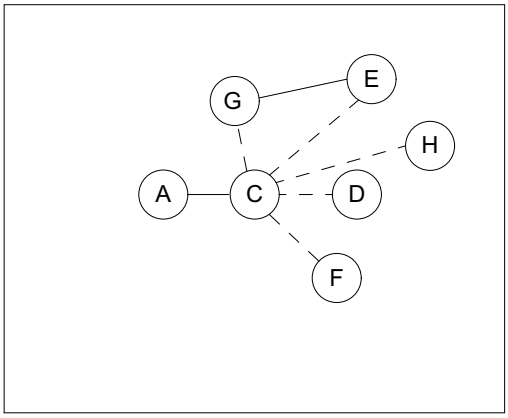

Summary of Changes

Some huts were replaced with larger buildings comprising cellular rooms.

The sequence from public spaces to private spaces is maintained

Spatial relationships between spaces like the onu, epata and oshoto spaces are maintained

Communal Homestead 12 (Aerial photo survey and visit done by researcher)

2003 2023

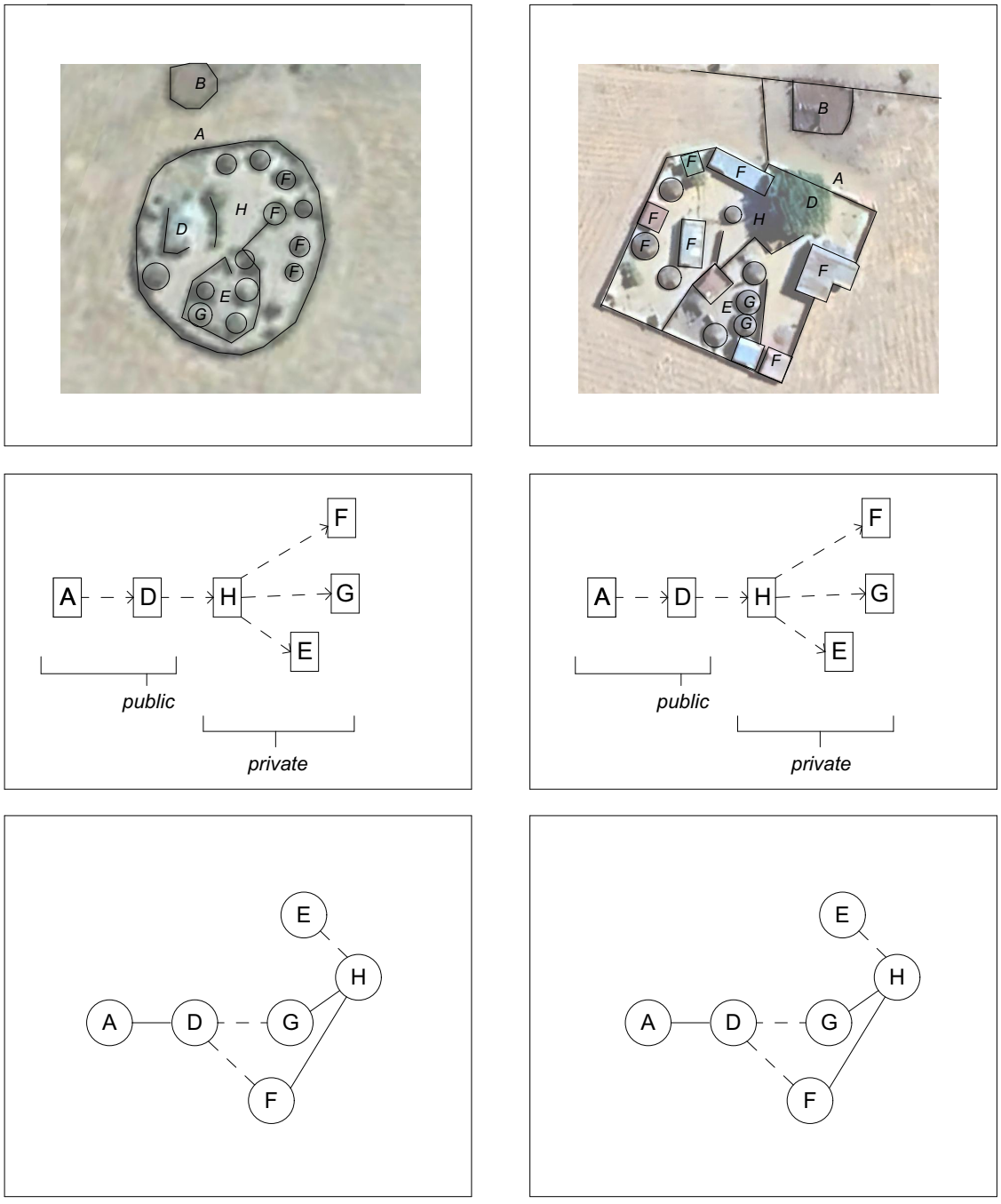

Summary of Changes

Some huts were replaced with larger buildings consisting of cellular rooms. The boundary fence was upgraded from irregular wooden sticks to a cement brick wall. The sequence from public to private spaces is preserved. Spatial relationships between spaces like the onu, epata, and oshoto are maintained.

Communal Homestead 13 **(Only a aerial photo survey done)**

2003 2023





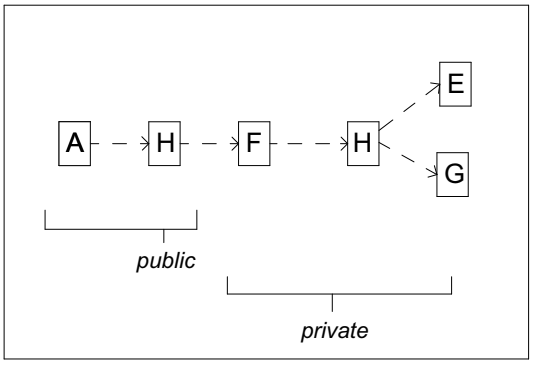

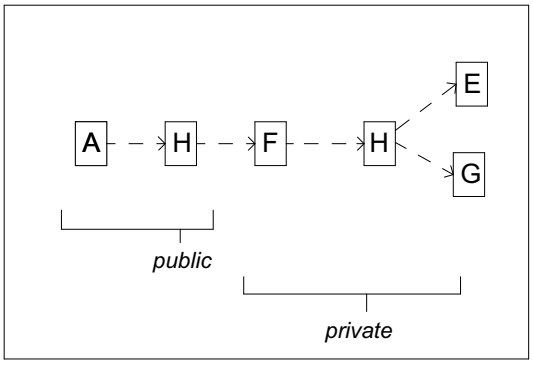

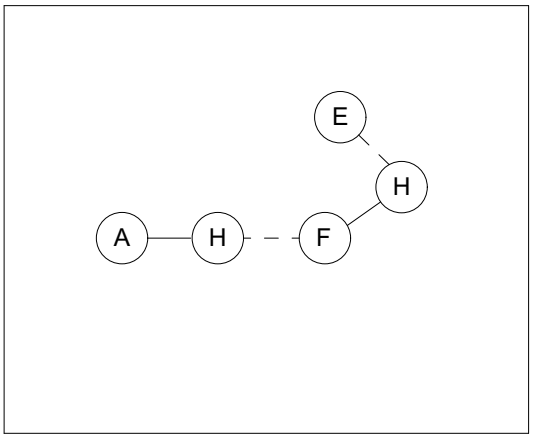

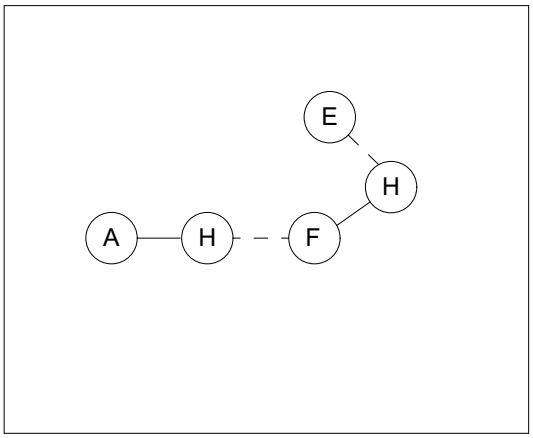

Summary of Changes

Some huts have been replaced with larger buildings comprising cellular rooms. Overall, there are fewer building structures in the homestead. The sequence from public to private spaces is maintained. Spatial relationships between spaces such as the onu, epata, and oshoto are preserved.

Communal Homestead 14 **(Only an aerial photo survey was done)**

2003 2023





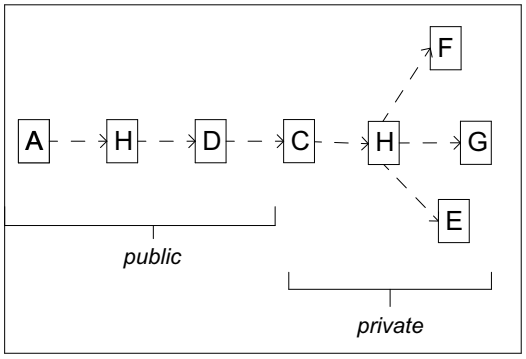

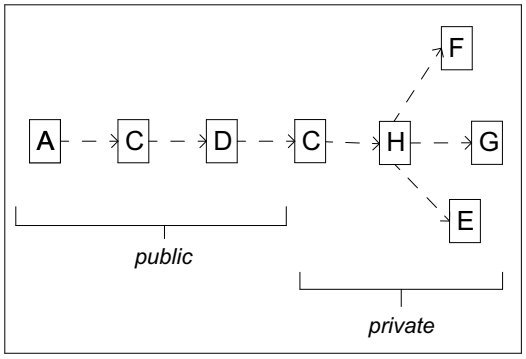

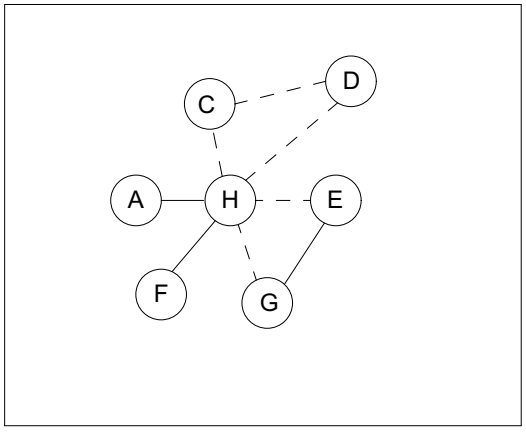

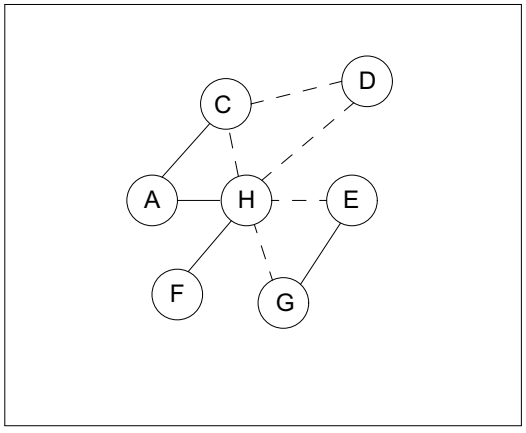

Summary of Changes

Some huts have been replaced with larger buildings comprising cellular rooms. Overall, there are fewer building structures in the homestead. The boundary fence was upgraded from irregular wooden sticks to a cement brick wall. The spatial depth and thresholds within the homestead are increased by the

introduction of the corridor space (c), and a new proximity relationship between the corridor and the open spaces in the homestead is established. The sequence from public to private spaces is maintained. Spatial relationships between spaces such as the onu, epata, and oshoto are preserved.

Communal Homestead 15 **(Only an aerial photo survey was done)**

2003 2023





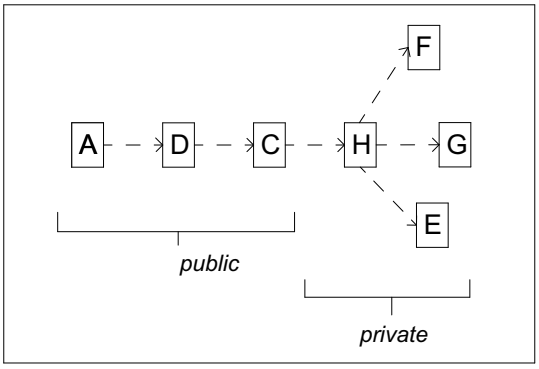

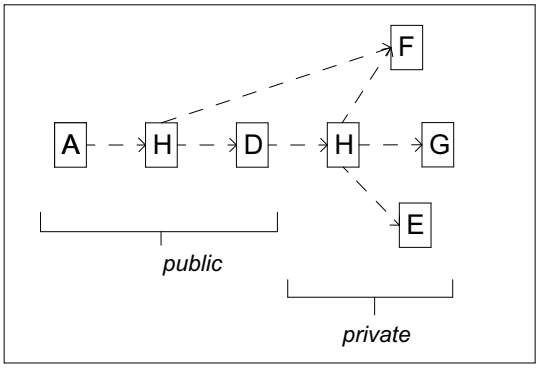

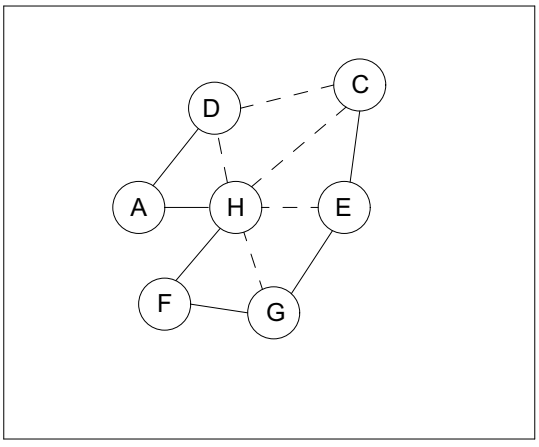

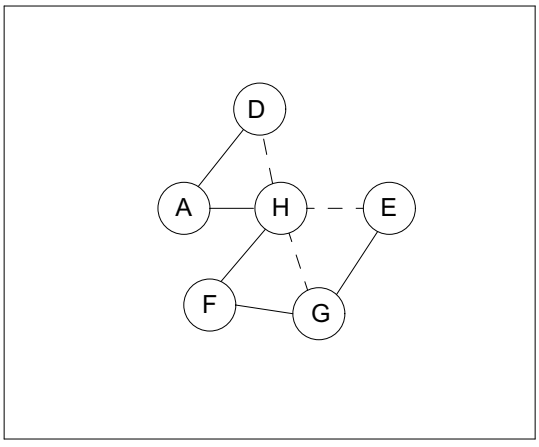

Summary of Changes

The overall number of building structures in the homestead increased. Most of the new building structures are modern, built with cement bricks. The boundary fence was upgraded from irregular wooden sticks to

a cement brick wall. The corridors were removed as most of the homestead was upgraded to cement brick construction; however, the spatial depth and spatial relationships were maintained using separation walls within the homestead.

Communal Homestead 16 **(Only an aerial photo survey was done)**

2003 2023

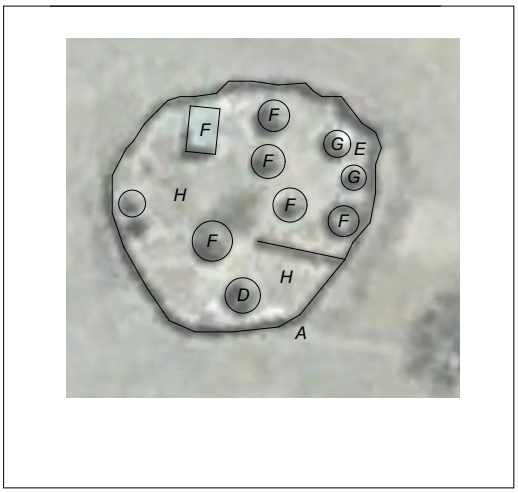



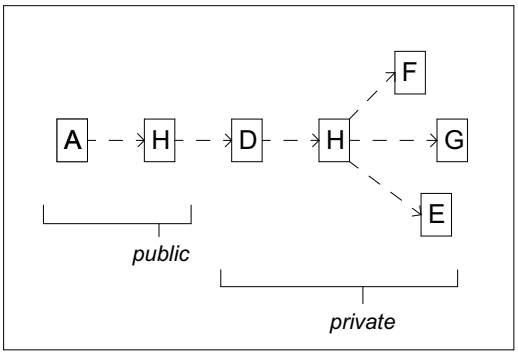

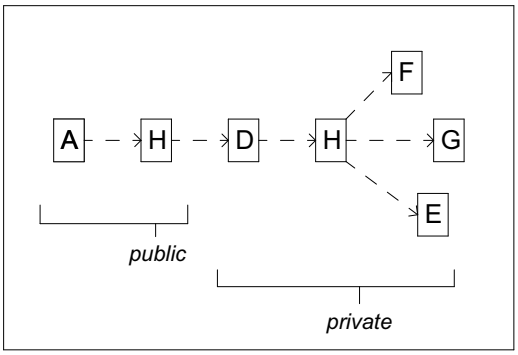

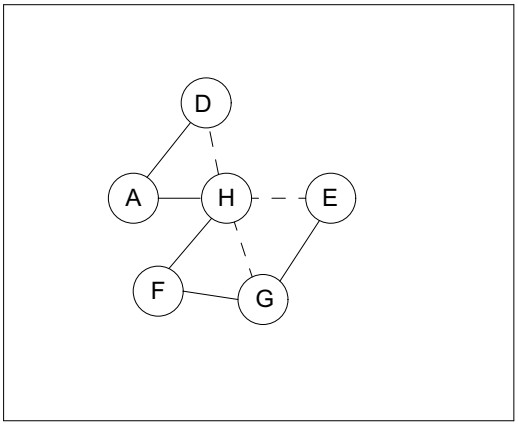

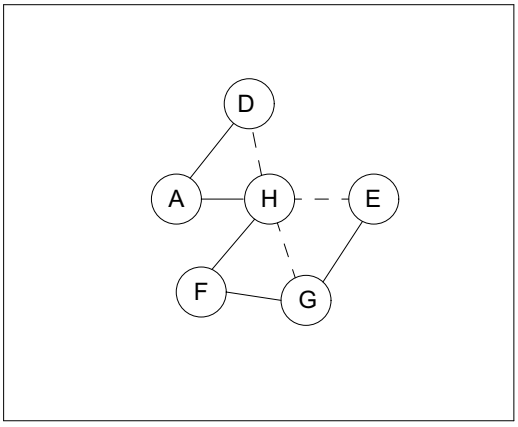

Summary of Changes

Huts in the homestead were replaced with modern cement brick structures with multiple cellular rooms. The boundary fence was upgraded from irregular wooden sticks to a cement brick wall. The spatial depth and spatial relationships were maintained.

Communal Homestead 17 **(Aerial photo survey and visit done by researcher)**

2003 2023

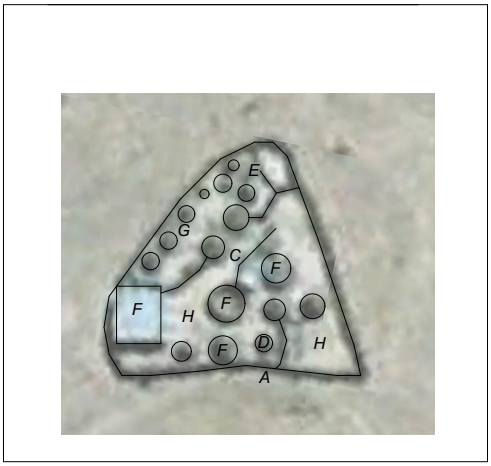



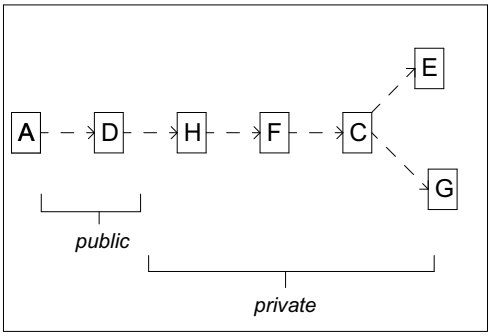

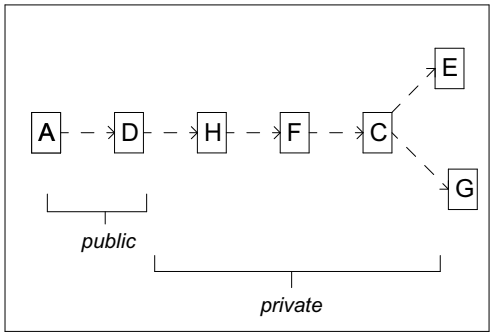

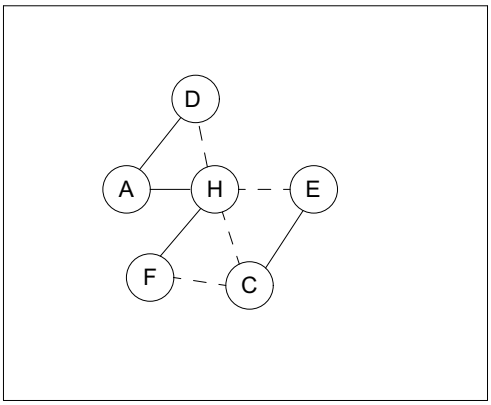

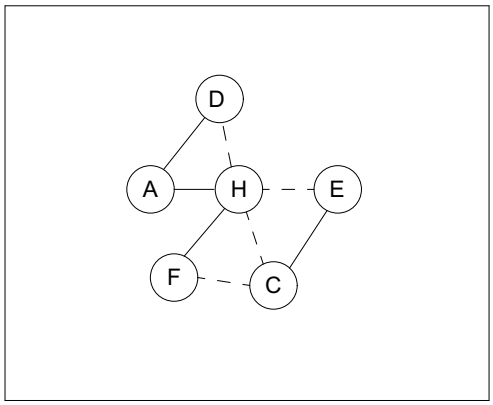

Summary of Changes

Huts in the homestead were replaced with modern cement brick structures with multiple cellular rooms. Some hits were ketp for storage. The boundary fence was upgraded from irregular wooden sticks to a cement brick wall. The spatial depth and spatial relationships were maintained.

Communal Homestead 18 (Aerial photo survey and visit done by researcher)

2003 2023

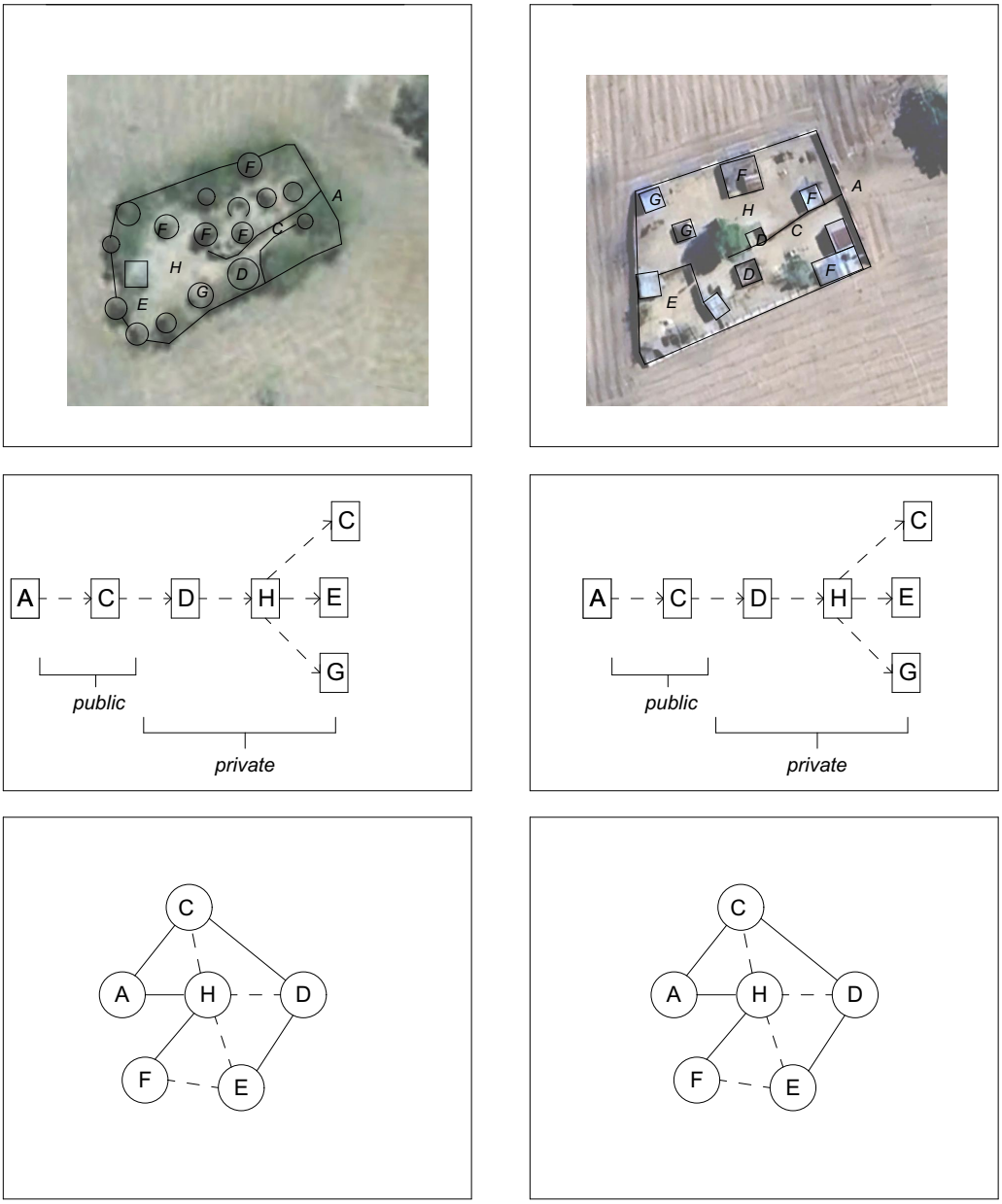

Summary of Changes

All the huts were replaced with larger buildings comprising cellular rooms. The boundary fence was upgraded from irregular wooden sticks to a cement brick wall. The sequence from public to private spaces is maintained. Spatial relationships between spaces like the onu, epata and oshoto are preserved.

Communal Homestead 19

2003

(Only a aerial photo survey done)

2023

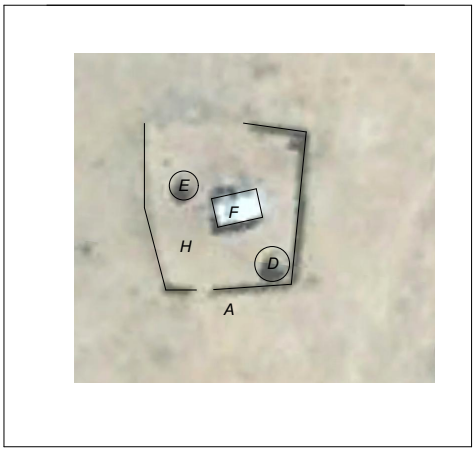



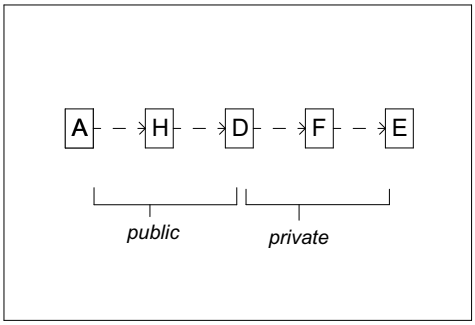

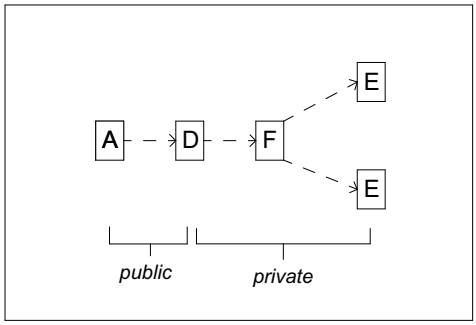

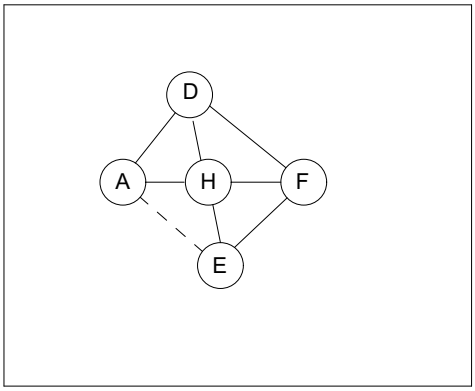

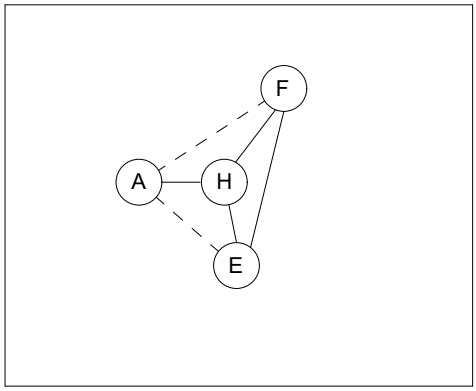

Summary of Changes

The enclosed homestead area was expanded, and more building structures were constructed around an open space (h). New modern cement brick structures and huts were added. The boundary fence was upgraded from wooden sticks to a cement brick wall. An oshoto space (d) was included, increasing the spatial depth and thresholds within the homestead. The addition of the oshoto space also established a new proximity relationship with the open areas and the entrance.

Communal Homestead 20 (Aerial photo survey and visit done by researcher)

2003 2023

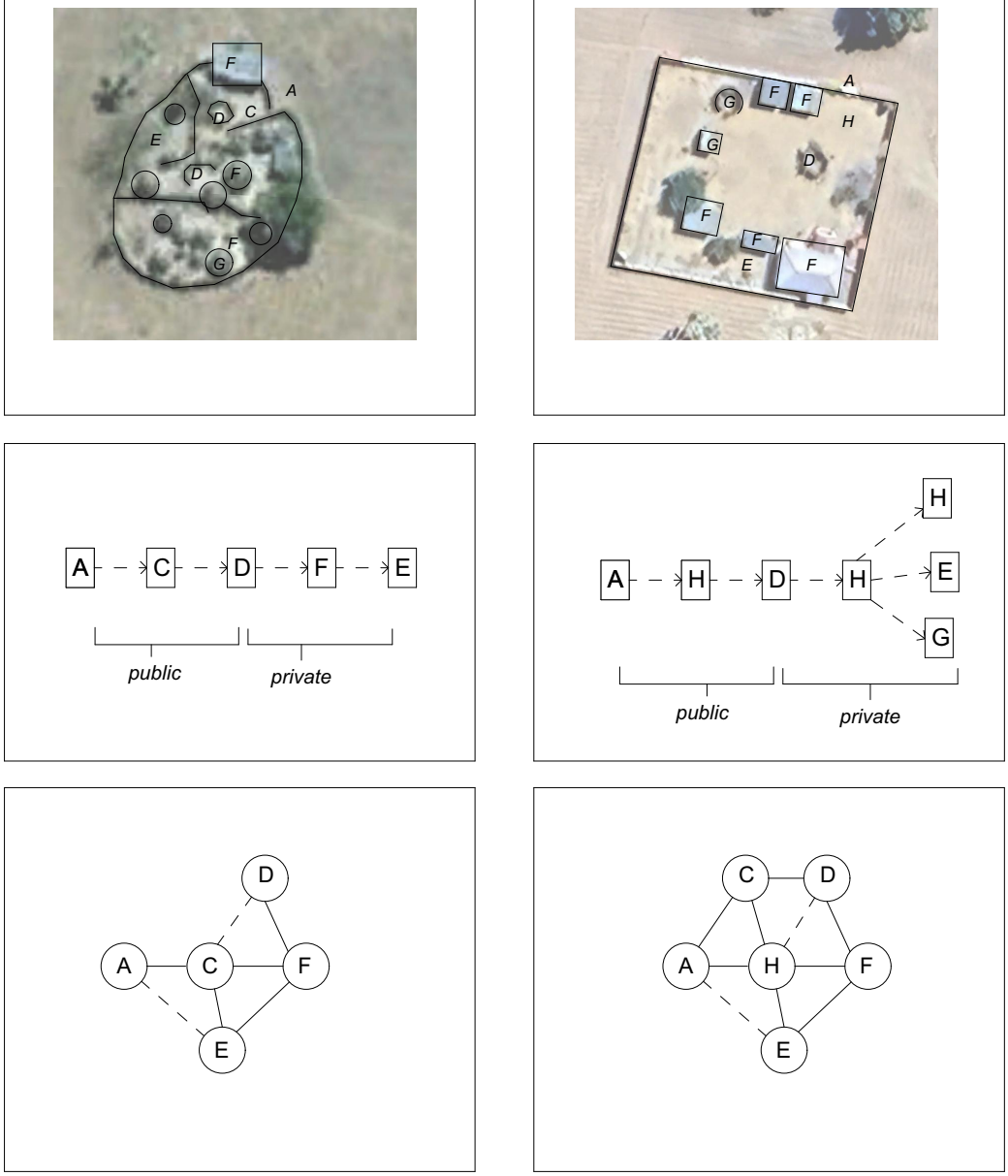

Summary of Changes

All the huts were replaced with larger buildings comprising cellular rooms. The boundary fence was upgraded from irregular wooden sticks to a cement brick wall. The overall enclosed size of the homestead increased with the regular cement brick wall enclosure. The sequence from public to private spaces is maintained, although larger open spaces (h) become the main threshold between the different spaces. Spatial relationships between spaces like the onu, epata and oshoto are preserved.

Urban Homestead 1 (Visited by the researcher in person)

2003 2023

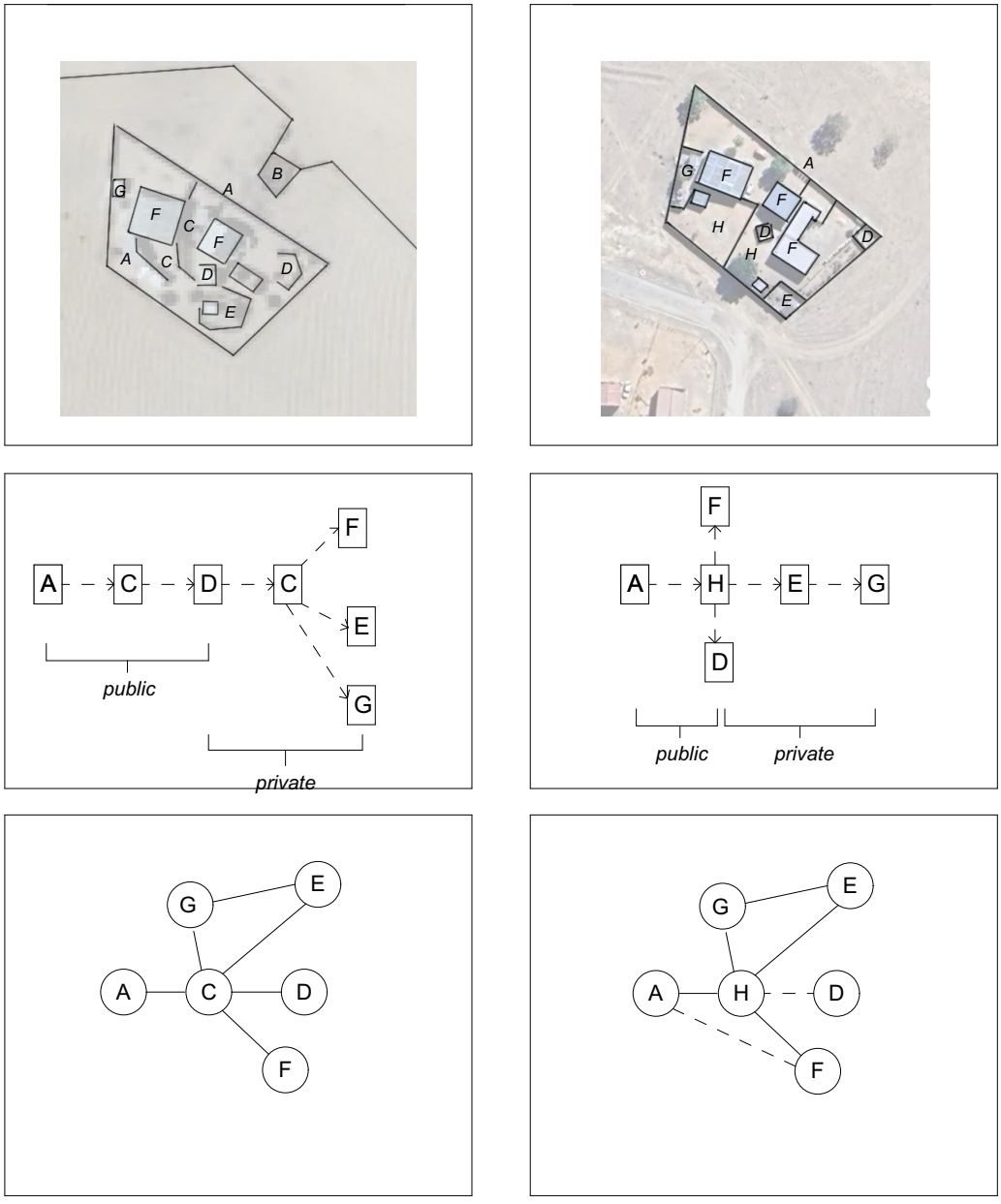

Summary of Changes

Modern cement brick building structures in the homestead remained, and some were enlarged. The kraal and surrounding fields were removed. The height of the boundary wall was increased for security. The corridor elements were taken out; however, additional internal walls were added to separate the epata space. The removal of the corridors means that there is closer spatial proximity and a stronger link between the entrance space (a) and the private enclosed spaces like bedrooms (f).

Urban Homestead 2 **(Only an aerial photo survey was done)**

2003 2023





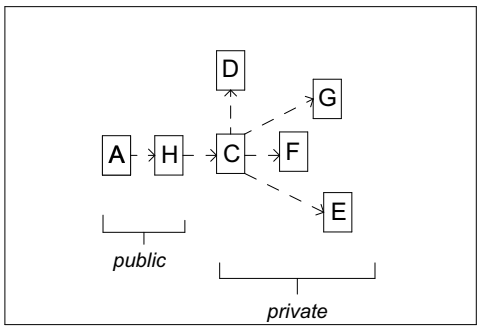

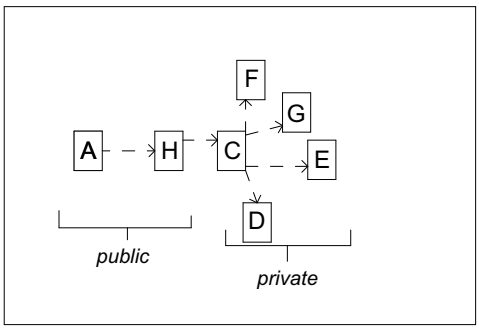

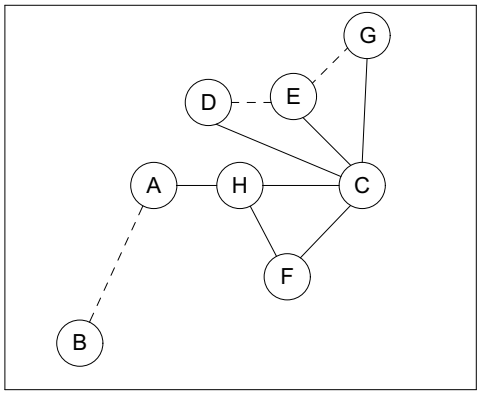

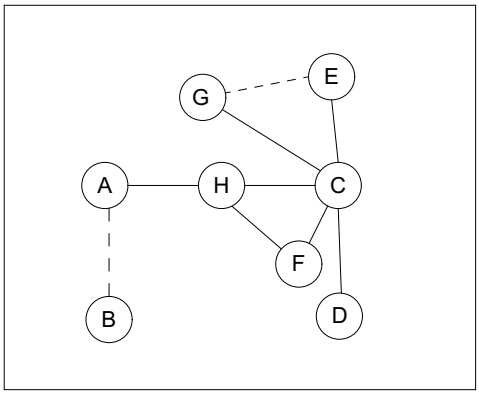

Summary of Changes

The overall size of the homestead was expanded by adding a new boundary around it. The kraal position was relocated. Larger modern building structures with cellular layouts were introduced. Older modern cement brick buildings in the homestead remained, with some being enlarged. The sequence from public to private spaces is maintained. Spatial relationships between spaces like the onu, epata and oshoto are preserved.

Urban Homestead 3 (Only an aerial photo survey was done)

2003 2023

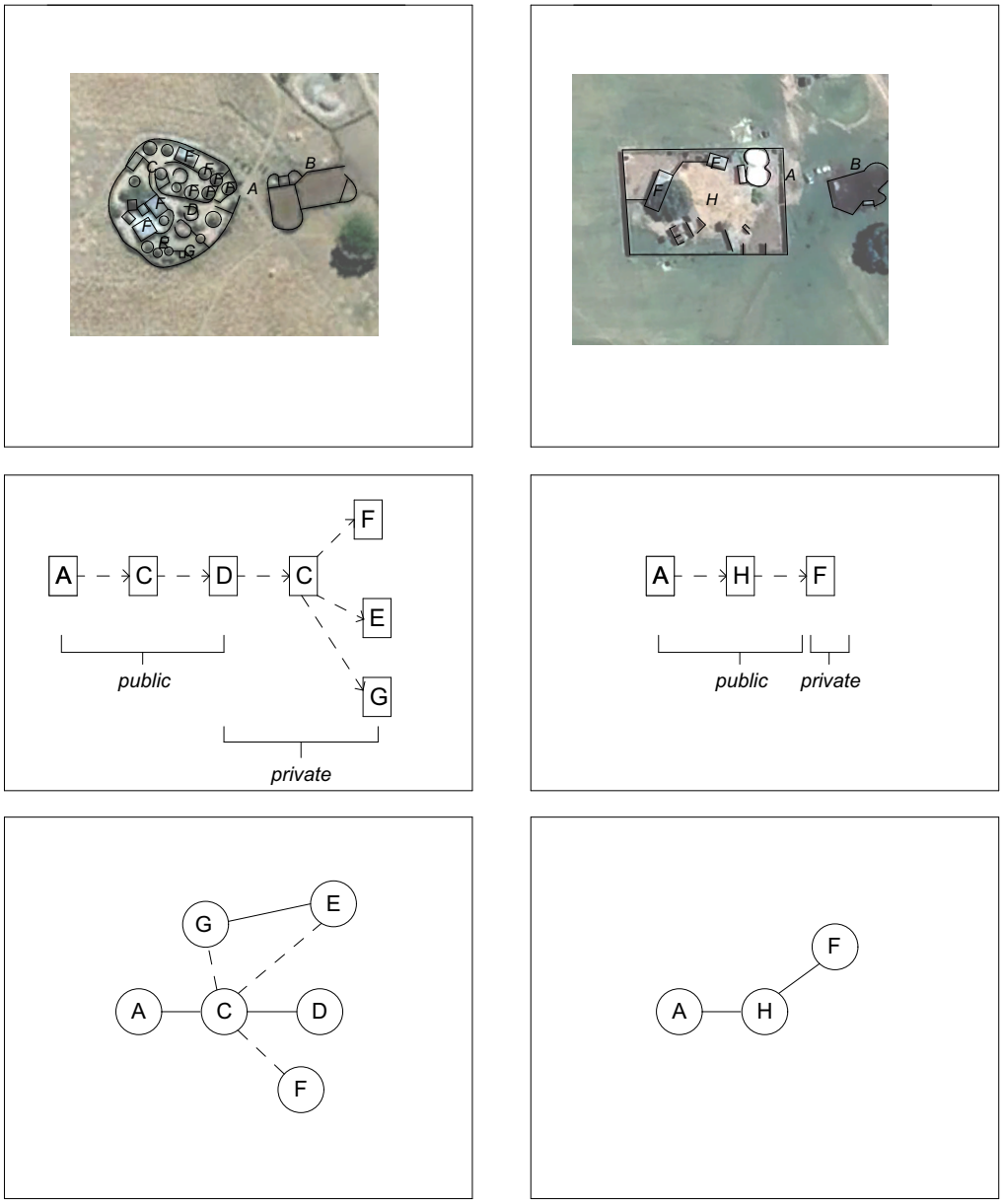

Summary of Changes

Most of the huts and other larger structures built with cement bricks have been removed. A central, large, open area was cleared at the centre of the homestead. The boundary fence was upgraded from irregular wooden sticks to a cement brick wall. The field has been removed. The sequence from public to private spaces has been reduced, and is only mediated by a large open area at the centre of the homestead.

Urban Homestead 3 **(Only an aerial photo survey was done)**

2003 2023

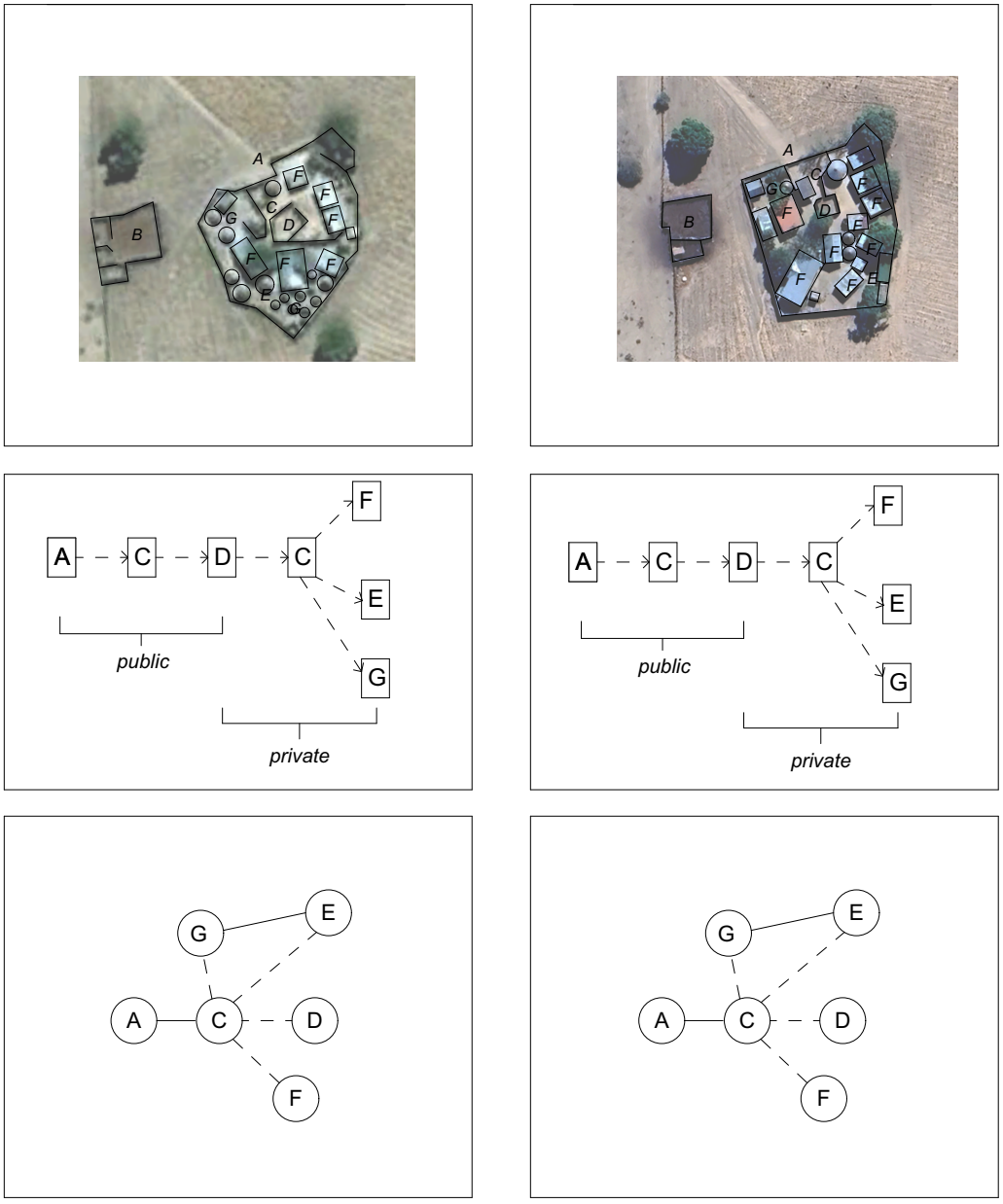

Summary of Changes

Most of the huts were replaced with larger buildings comprising cellular rooms. The boundary fence was upgraded from irregular wooden sticks to a cement brick wall. The field has been removed. The sequence from public to private spaces is maintained. Spatial relationships between spaces like the onu, epata and oshoto are preserved.

Urban Homestead 4 **(Only an aerial photo survey was done)**

2003 2023





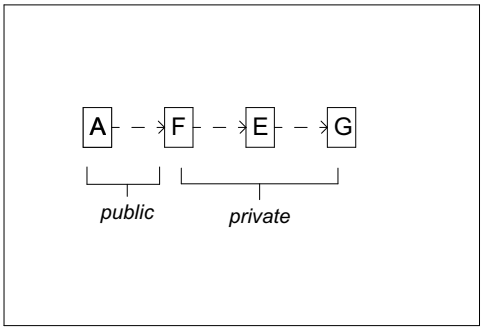

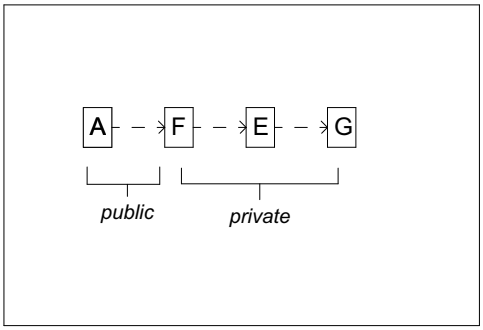

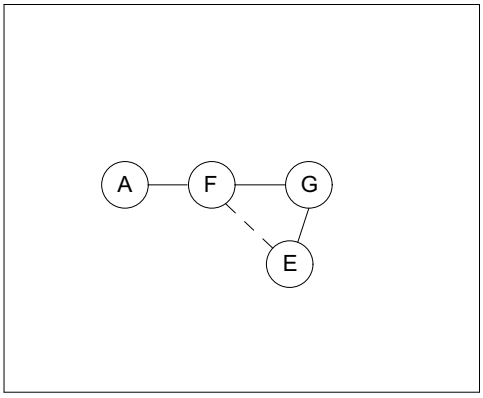

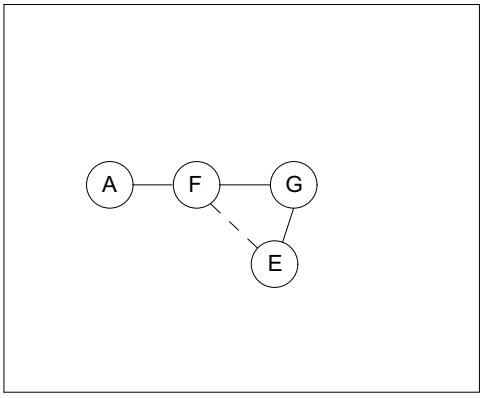

Summary of Changes

Most of the huts were replaced with larger buildings comprising cellular rooms. The boundary fence was upgraded from irregular wooden sticks to a cement brick wall. The field and kraal have been removed. The sequence from public to private spaces is maintained. Spatial relationships between spaces, such as the onu and Epata, are preserved.

Urban Homestead 5 **(Only an aerial photo survey was done)**

2003 2023

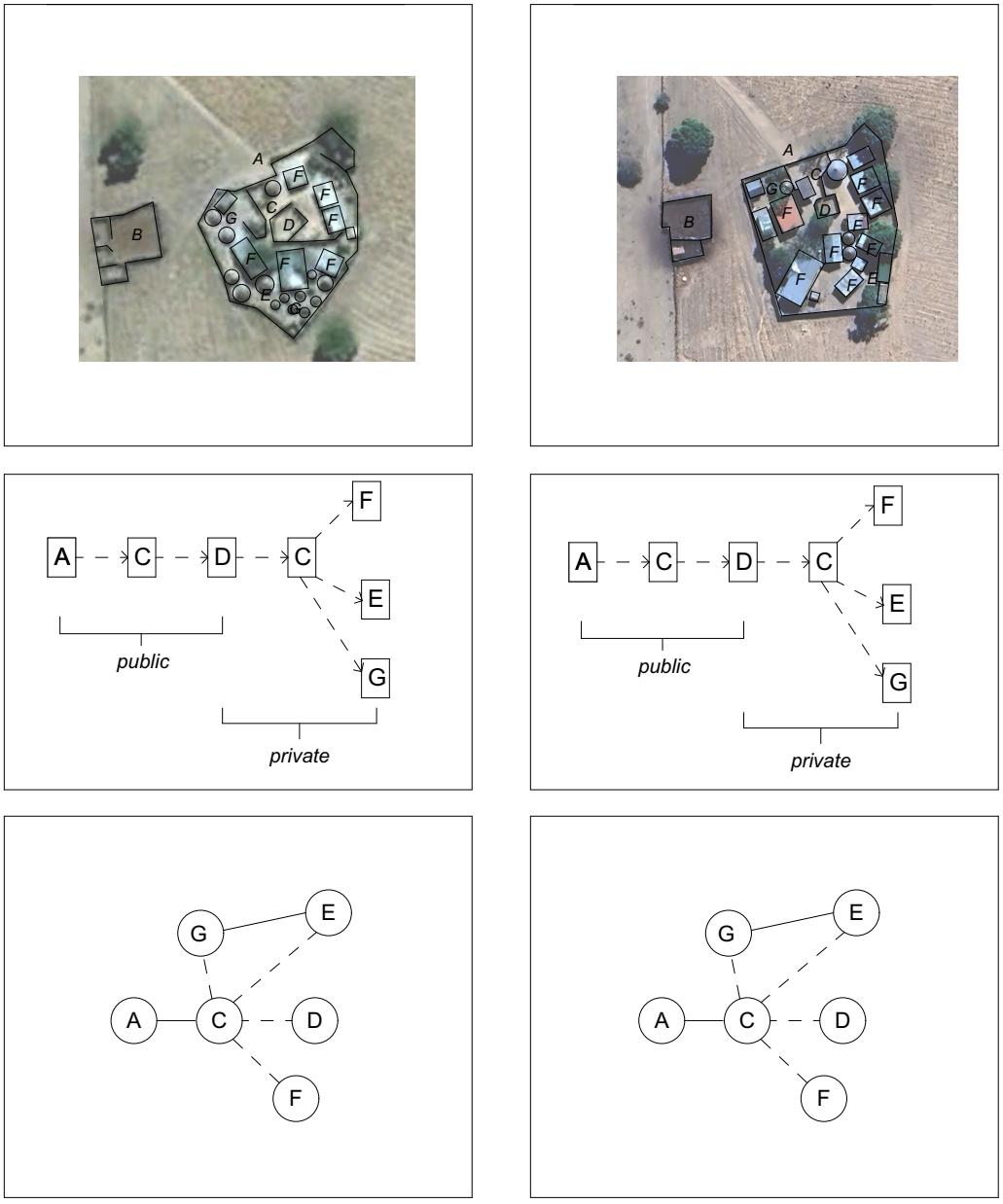

Summary of Changes

Most of the huts were replaced with larger buildings comprising cellular rooms. The boundary fence was upgraded from irregular wooden sticks to a cement brick wall. The field has been removed. The sequence from public to private spaces is maintained. Spatial relationships between spaces like the onu, epata and oshoto are preserved.

Urban Homestead 6 (Aerial photo survey and visit done by researcher)

2003 2023

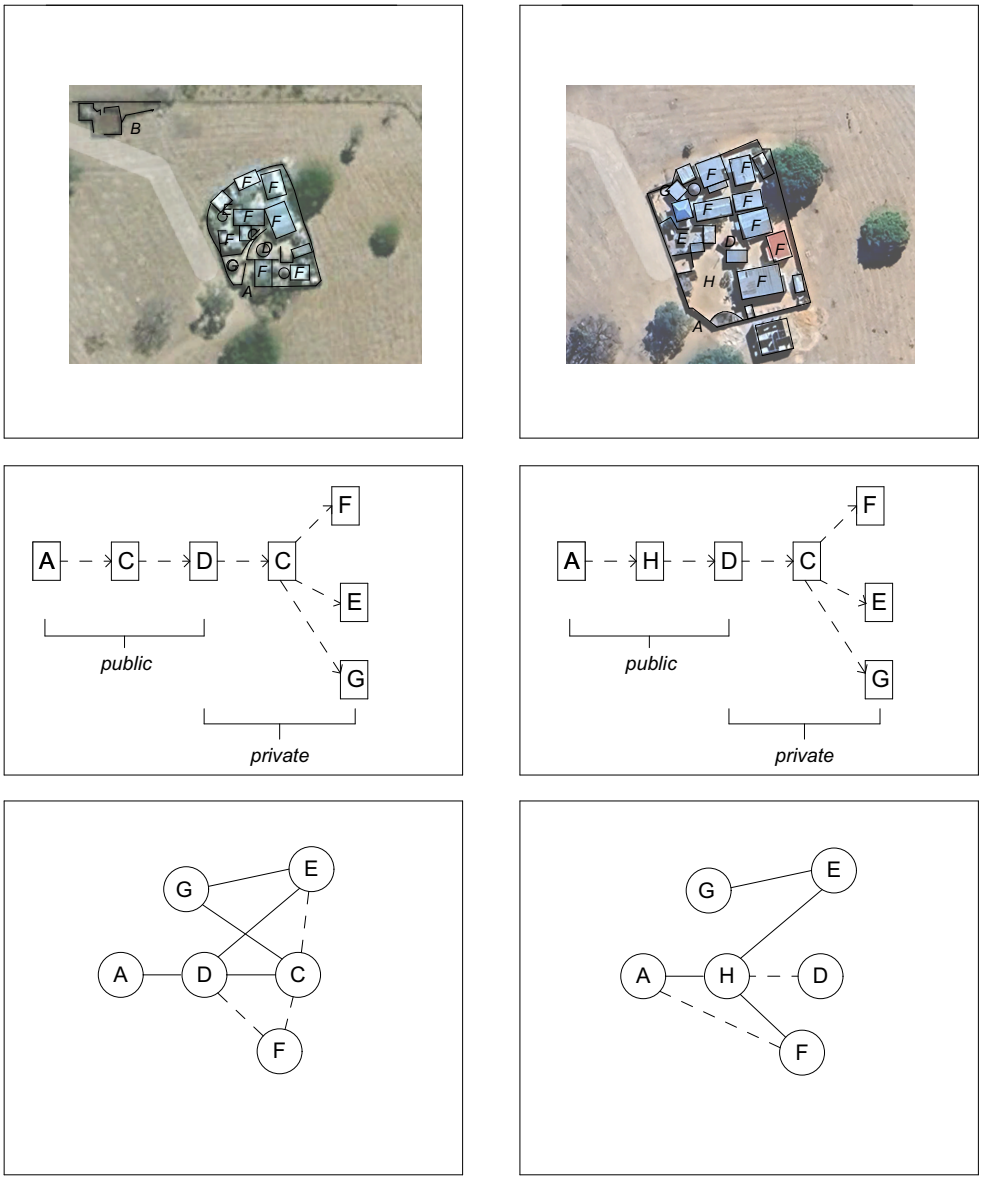

Summary of Changes

All the huts were replaced with larger buildings comprising cellular rooms. The boundary fence was upgraded from irregular wooden sticks to a cement brick wall. The field and kraal have been removed. The sequence from public to private spaces is maintained. Spatial relationships between spaces like the onu, epata and oshoto have changed as the entrance now leads to the open space and not the oshoto space as before. An additional modern cement brick house has been built on the adjacent plot that was awarded.

Urban Homestead 7 (Visited by the researcher in person)

2003



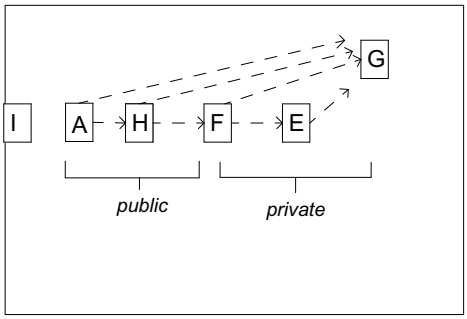

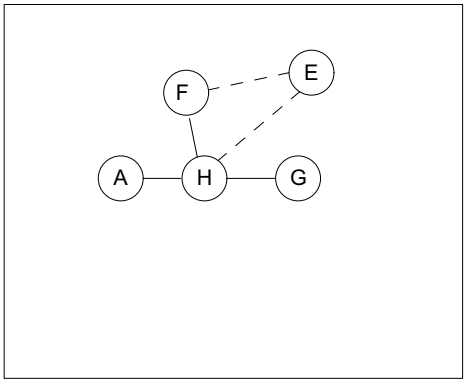

2023



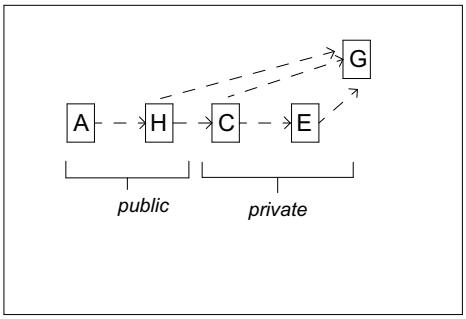

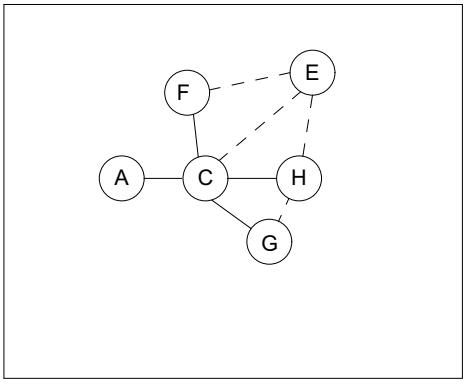

Summary of Changes

The cuca shop has been removed. The field has been removed. The sequence from public to private spaces is maintained, with the epata space remaining the most private. The cuca shop near the road was removed. Spatial relationships between spaces like the onu, epata and oshoto are preserved.

Urban Homestead 8 **(Only an aerial photo survey was done)**

2003 2023

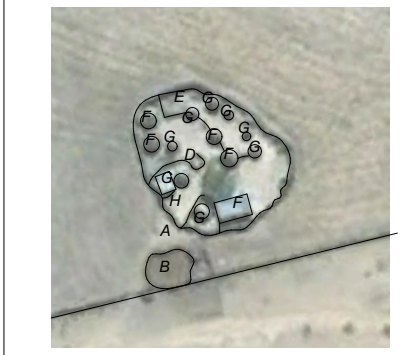



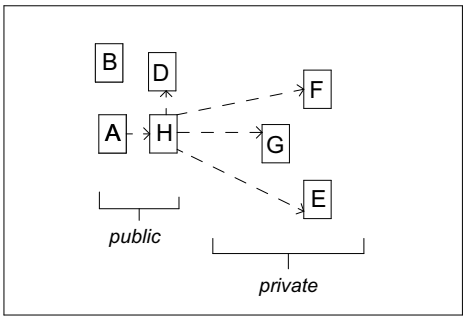

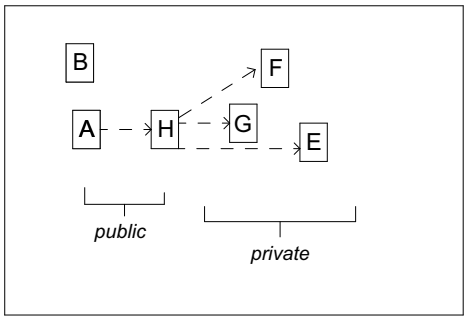

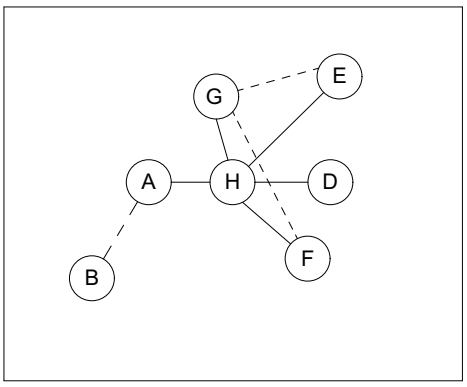

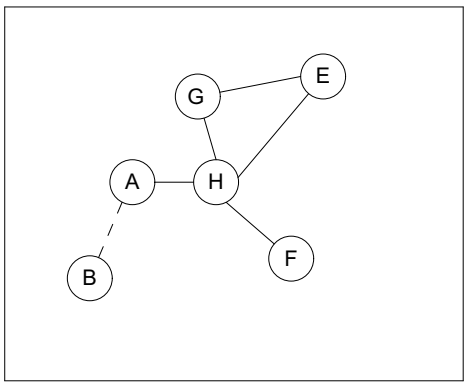

Summary of Changes

Most of the huts were replaced with smaller modern cement brick buildings comprising cellular rooms. The boundary fence was upgraded from irregular wooden sticks to a cement brick wall.. The sequence from public to private spaces is maintained. Spatial relationships between spaces like the onu, epata and oshoto are preserved.

Urban Homestead 9 **(Only an aerial photo survey was done)**

2003 2023

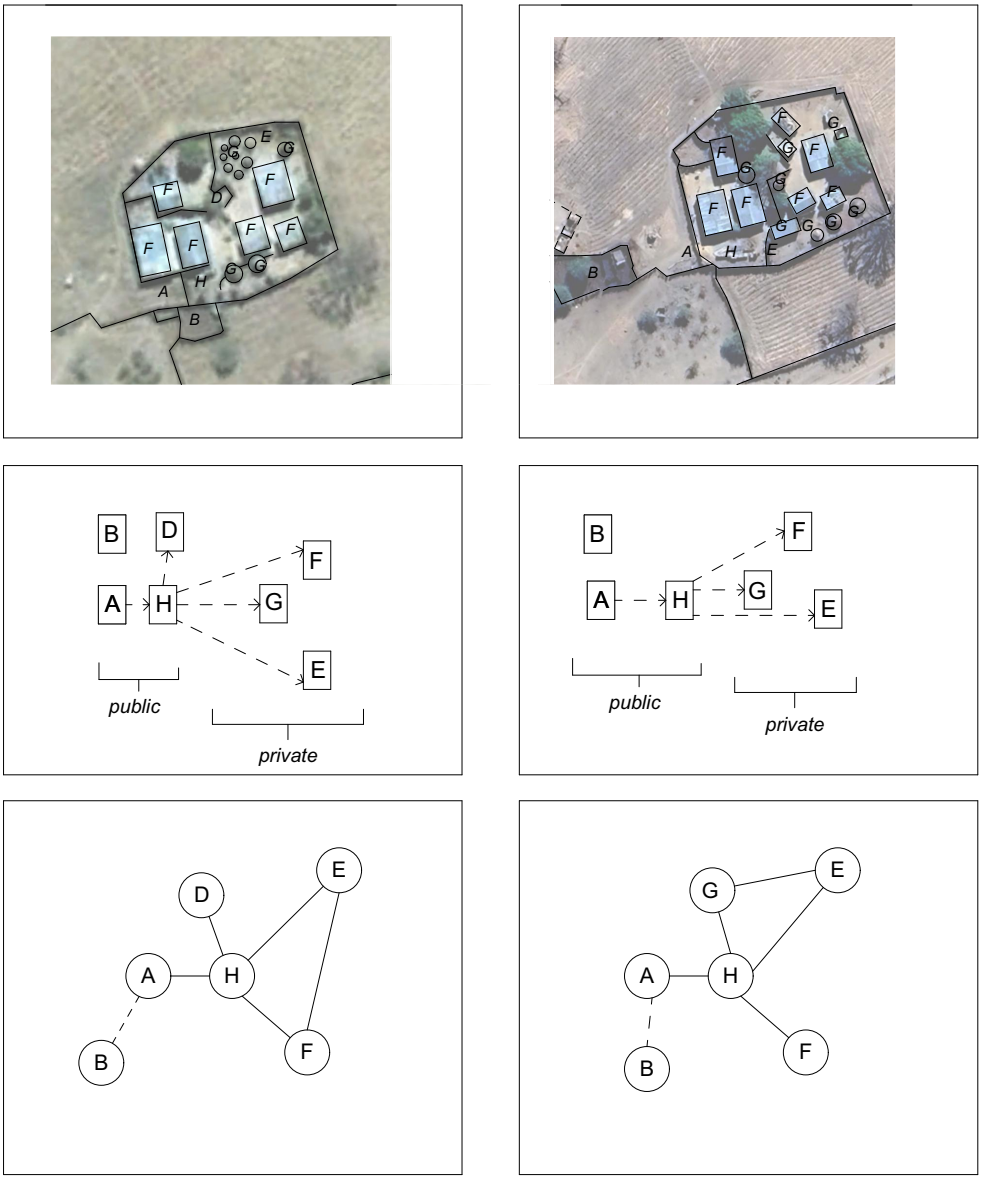

Summary of Changes

All the huts were replaced with larger buildings comprising cellular rooms. The boundary fence was upgraded from irregular wooden sticks to a cement brick wall. The sequence from public to private spaces is maintained. Spatial relationships between spaces like the onu, epata and oshoto are preserved.

Urban Homestead 10

2003



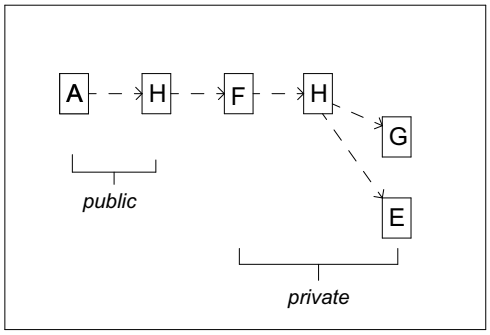

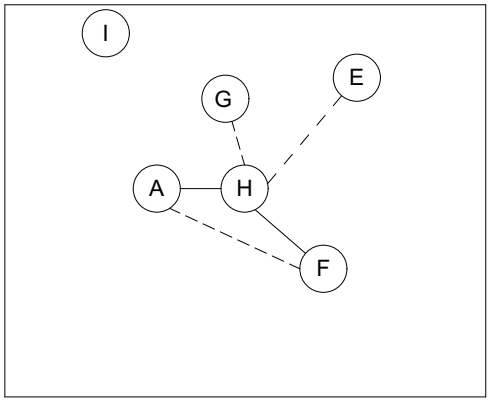

(Only an aerial photo survey was done)

2023



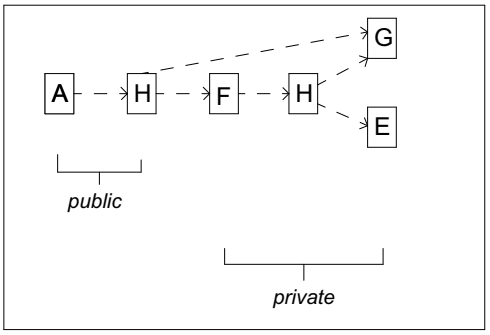

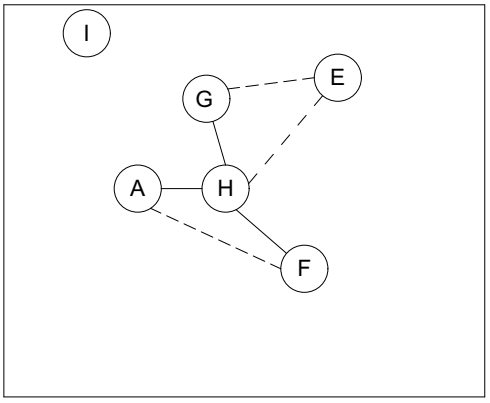

Summary of Changes

No major changes. The cuca shops near the road were maintained.

Urban Homestead 11

2003



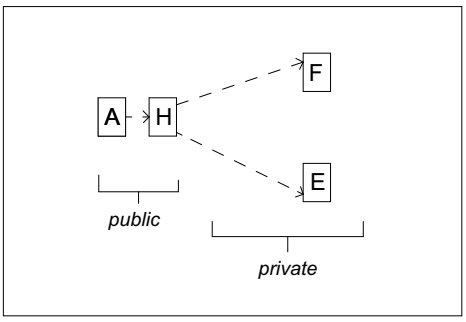

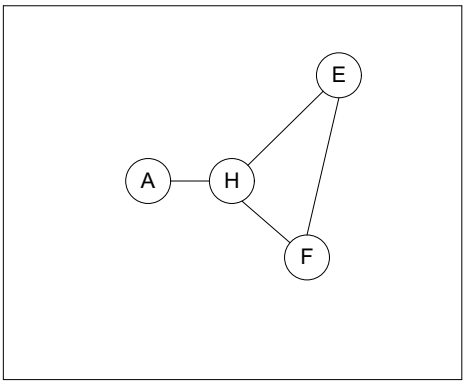

(Only an aerial photo survey was done)

2023



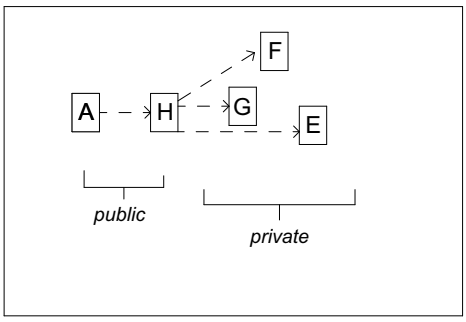

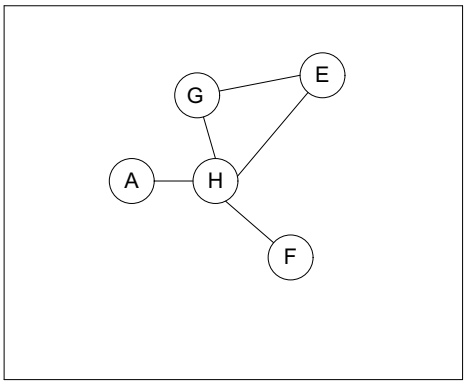

Summary of Changes

New modern cement brick structures with cellular room layouts were added. The boundary fence was upgraded from irregular wooden sticks to a cement brick wall. The sequence from public to private spaces was increased with the addition of the modern structures.

Urban Homestead 12 **(Aerial photo survey and visit done by researcher)**

2003 2023

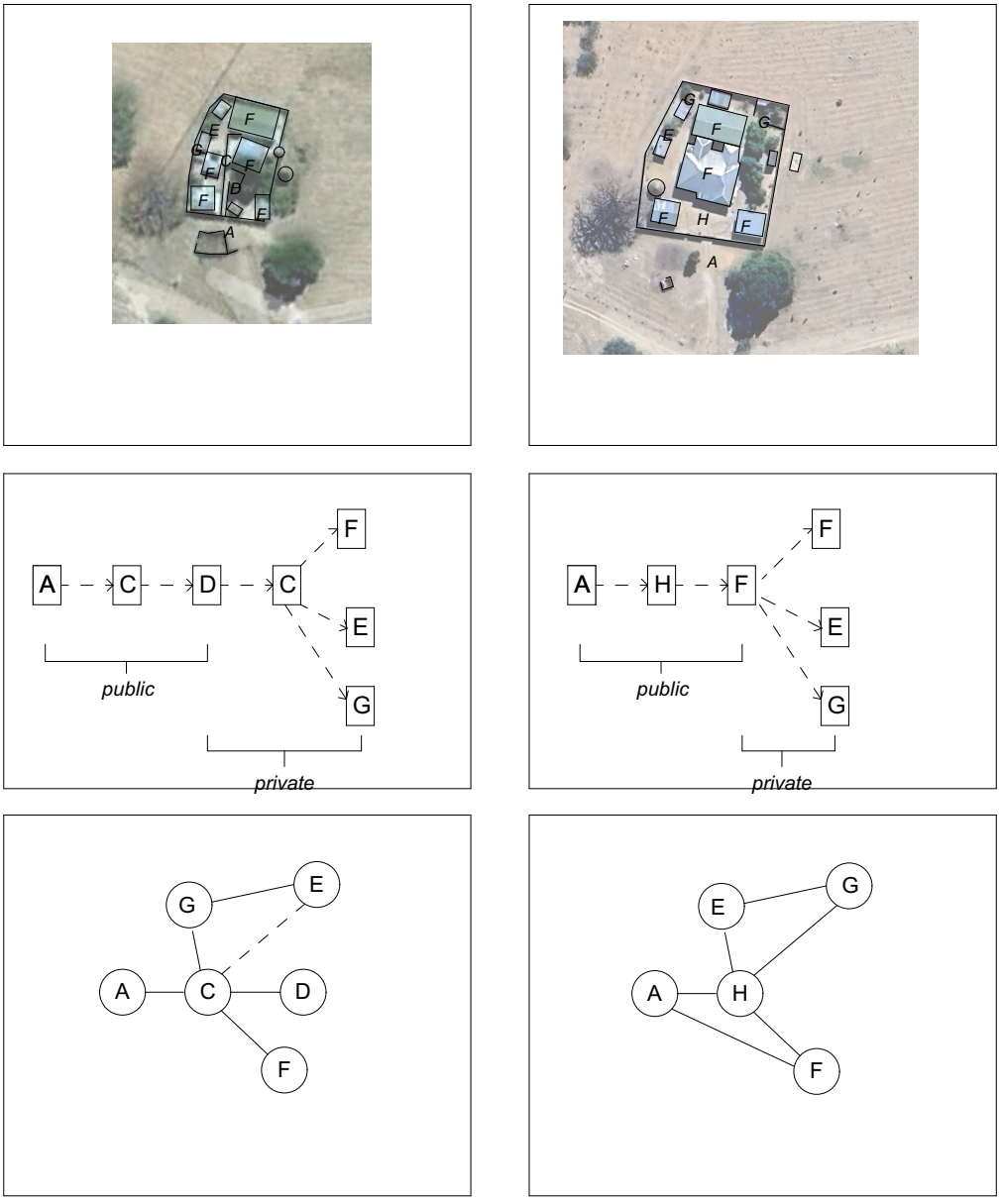

Summary of Changes

Larger modern cement brick buildings comprising cellular rooms were built. The boundary fence was upgraded from irregular wooden sticks to a cement brick wall. The sequence from public to private spaces is maintained. Spatial relationships between spaces like the onu, epata and oshoto are preserved.

Urban Homestead 13

2003



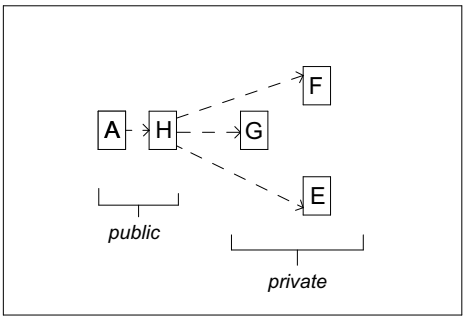

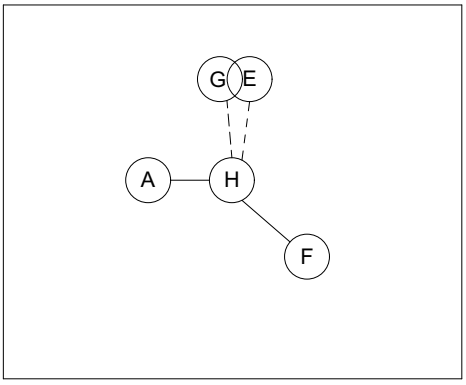

(Only an aerial photo survey was done)

2023



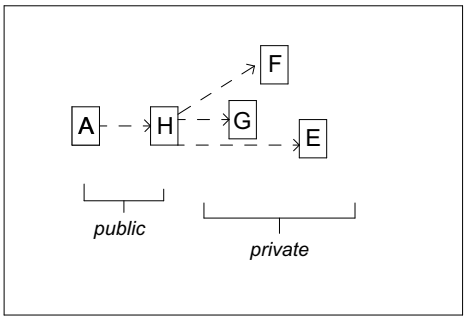

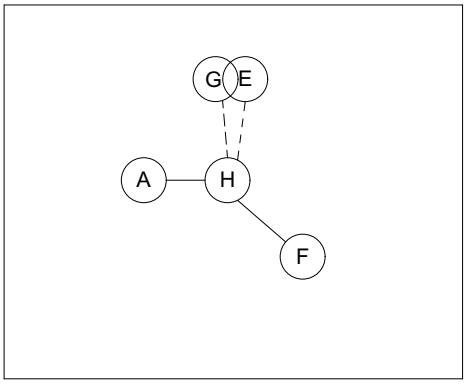

Summary of Changes

No major changes.

Urban Homestead 14

2003

(Only an aerial photo survey was done)

2023





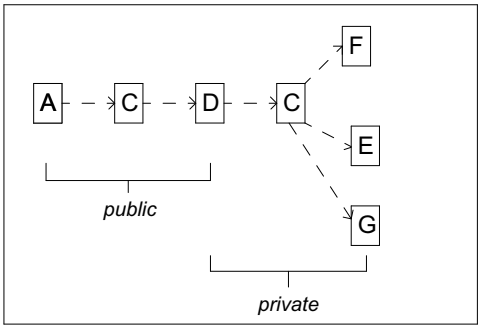

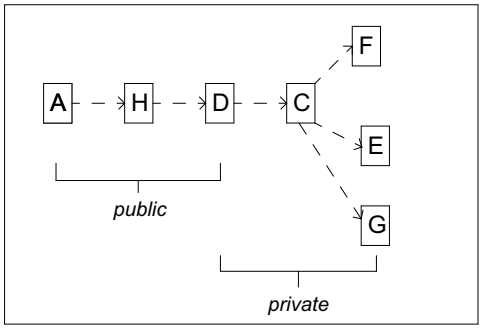

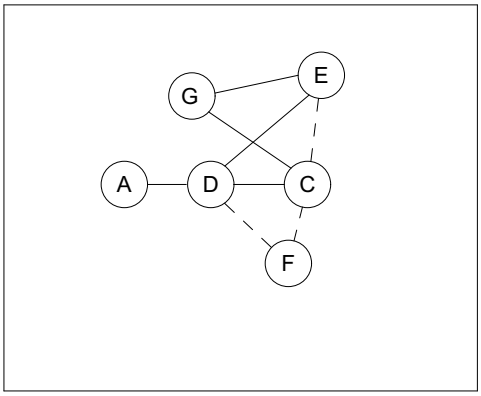

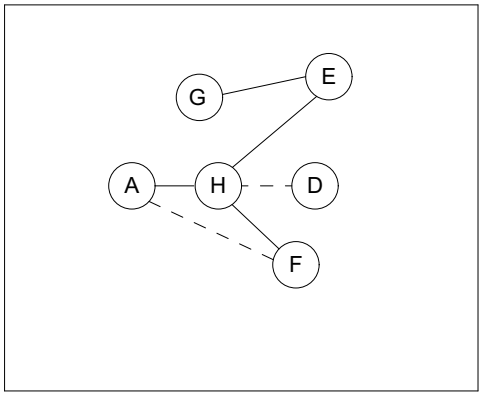

Summary of Changes

Many of the vernacular spatial elements, like the corridors (c) have been removed. The boundary fence was upgraded from irregular wooden sticks to a cement brick wall. The sequence from public to private spaces is maintained, although the entrance now leads to an open area, whereas previously it led to the corridor. Spatial relationships between spaces like the onu, epata and oshoto are preserved.

Urban Homestead 15 **(Aerial photo survey and visit done by researcher)**

2003 2023

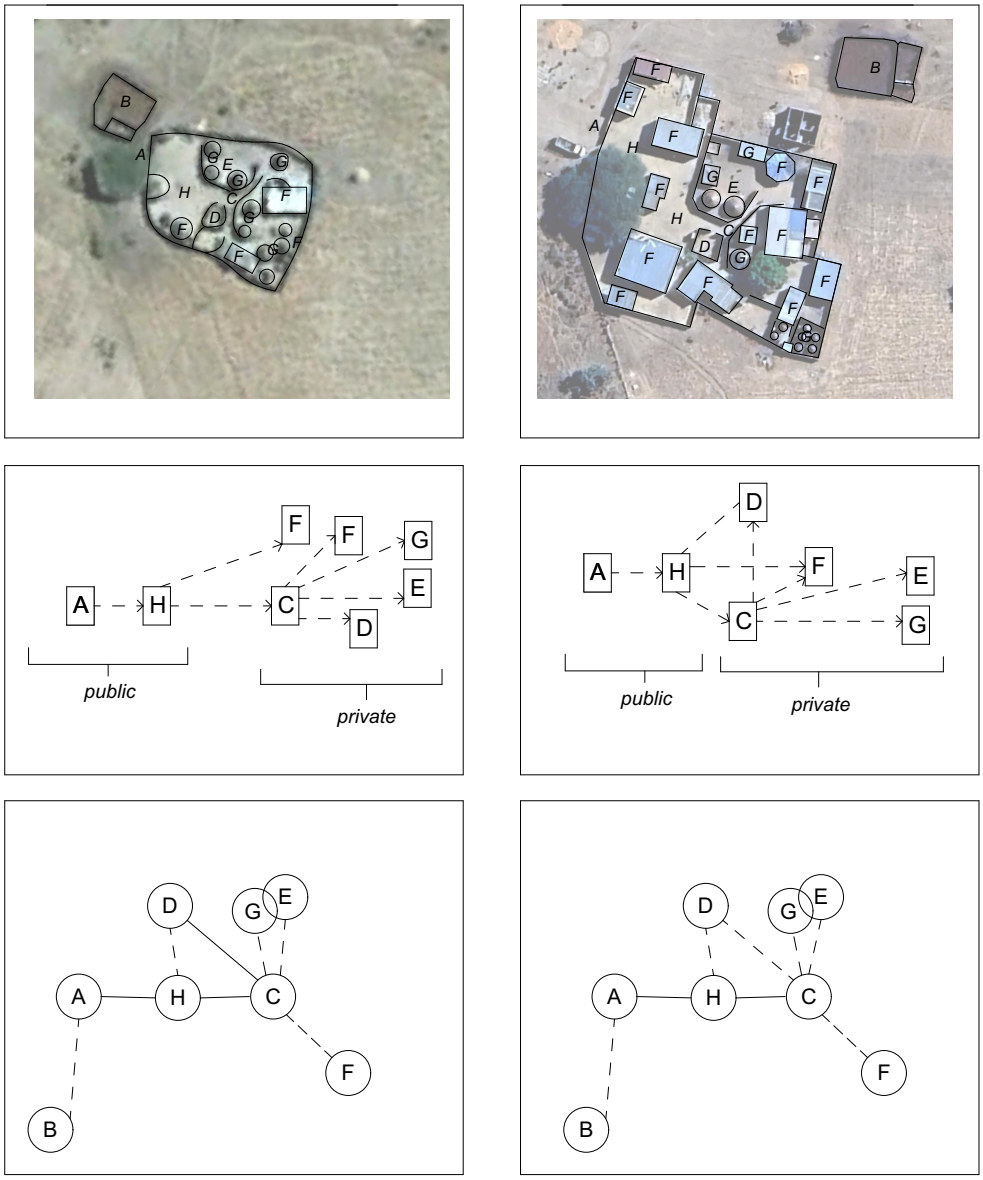

Summary of Changes

The homestead has added many modern cement brick structures. The position of the kraal has been changed. The boundary fence was upgraded from irregular wooden sticks to a cement brick wall. The sequence from public to private spaces is maintained with the open area (h) leading to the more private areas of the homestead. Spatial relationships between spaces like the onu, epata and oshoto are preserved.

Urban Homestead 16

2003



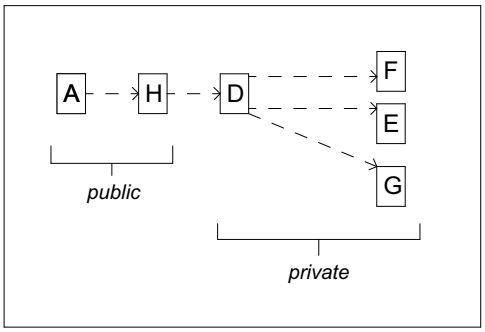

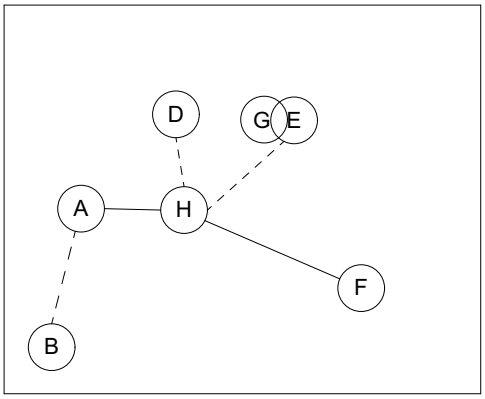

(Only an aerial photo survey was done)

2023



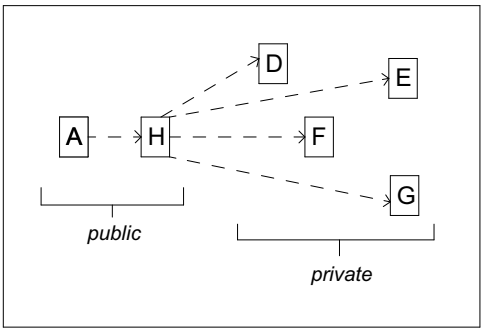

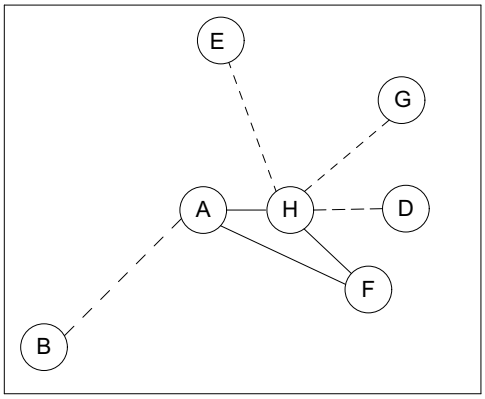

Summary of Changes

The homestead has added many modern, cement-brick structures. The boundary fence was upgraded from irregular wooden sticks to a cement brick wall. The cuca shop near the road was maintained. The sequence from public to private spaces is maintained. Spatial relationships between spaces like the onu, epata and oshoto are preserved.

Urban Homestead 17

2003

(Only an aerial photo survey was done)

2023





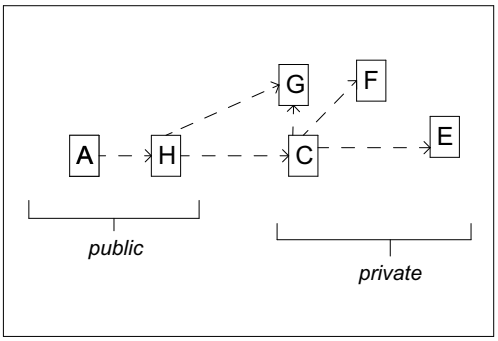

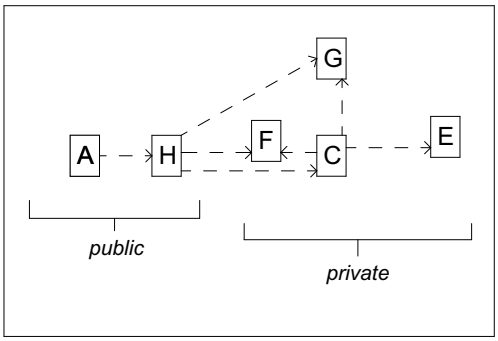

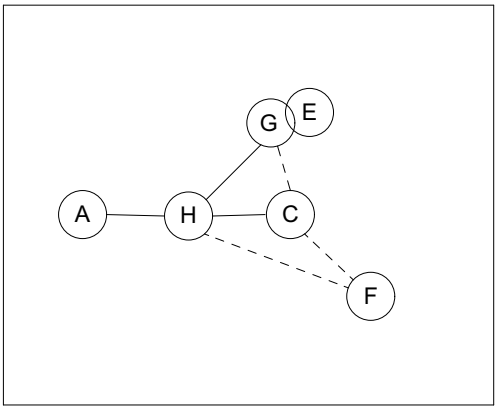

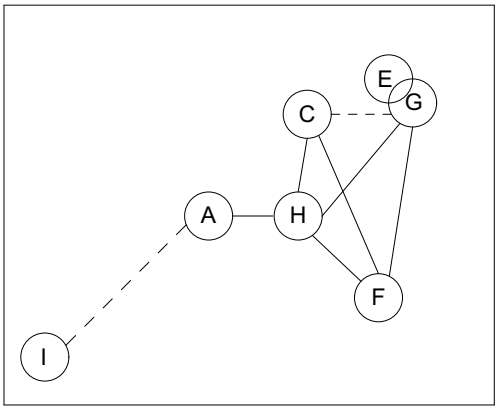

Summary of Changes

A few huts were replaced with larger buildings comprising cellular rooms. A few huts have been kept for storage. The boundary fence was upgraded from irregular wooden sticks to a cement brick wall. The cuca near the road was maintained. The sequence from public to private spaces is maintained. Spatial relationships between spaces like the onu, epata and oshoto are preserved.

Urban Homestead 18

2003



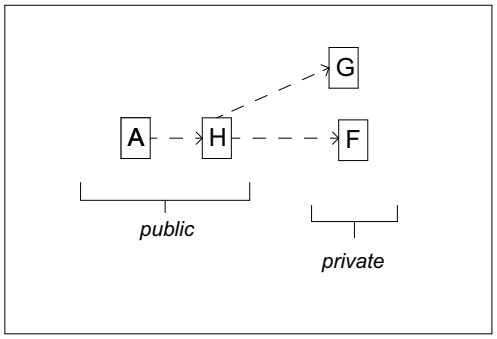

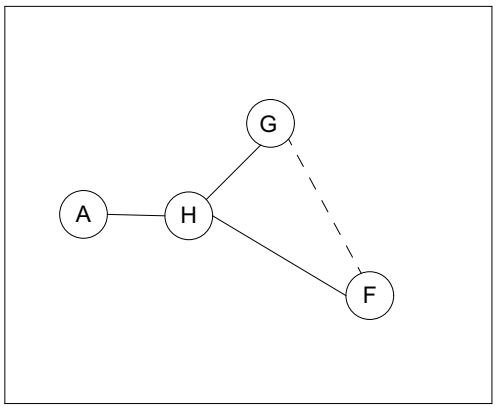

(Only an aerial photo survey was done)

2023



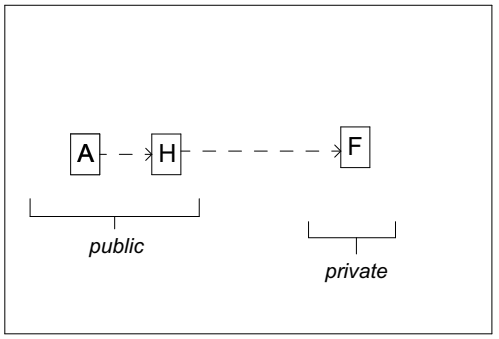

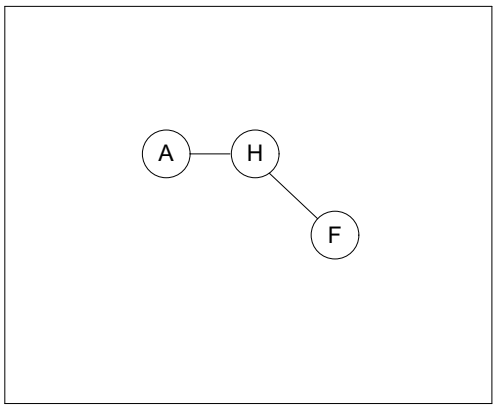

Summary of Changes

The number of modern cement brick buildings in the homestead remained unchanged.

Urban Homestead 19

2003

(Only an aerial photo survey was done)

2023

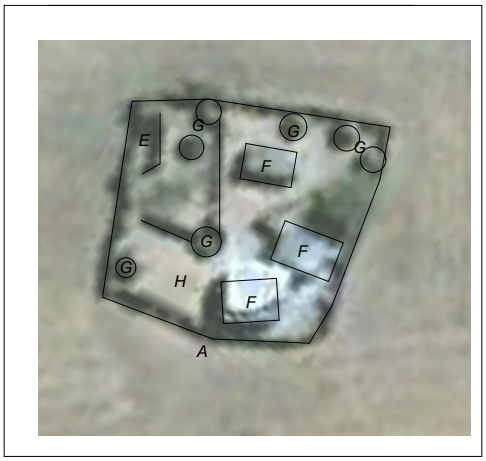



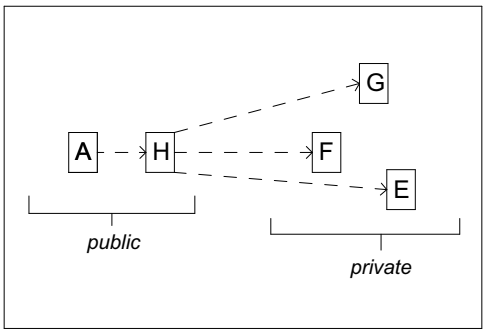

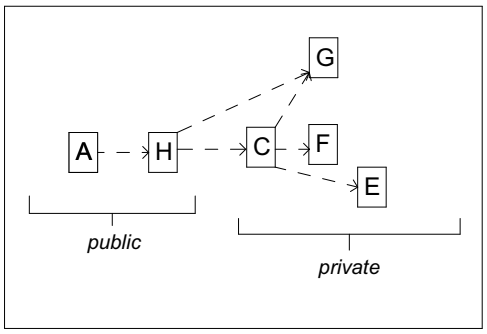

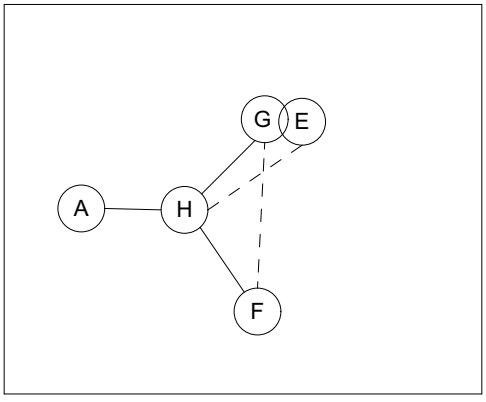

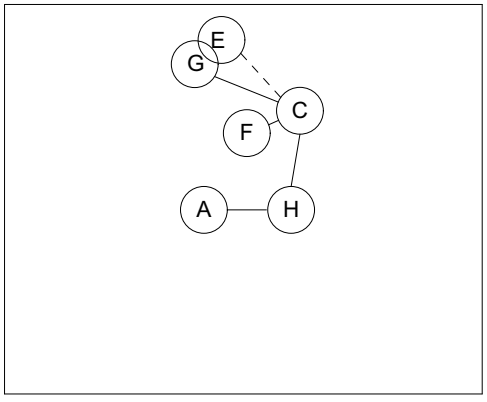

Summary of Changes

All the huts were replaced with larger buildings comprising cellular rooms. The boundary fence was upgraded from irregular wooden sticks to a cement brick wall. The sequence from public to private spaces is maintained. Spatial relationships between spaces like the onu, epata and oshoto are preserved.

Urban Homestead 20

2003



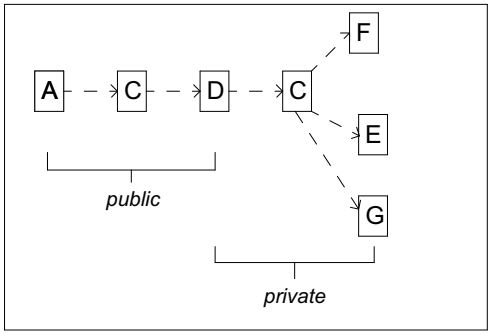

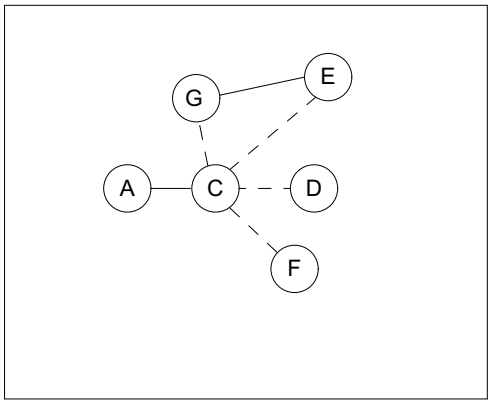

(Only an aerial photo survey was done)

2023



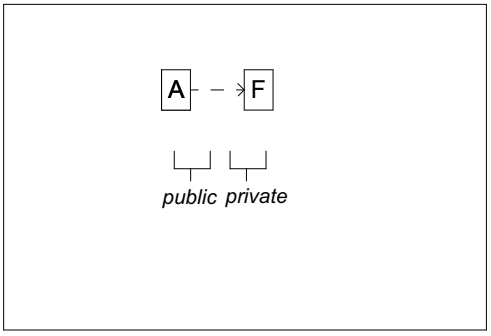

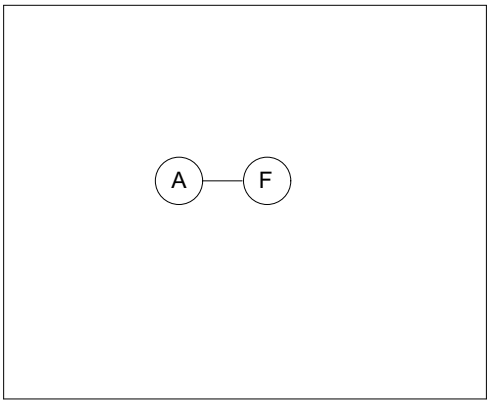

Summary of Changes

Entire homestead has been removed and only one larger modern cement brick building has been left behind. Field and fences around the field have been removed.

COUNCIL MINUTES

OUTAPI TOWN COUNCIL

Tel: 065 - 251191/2
Fax: 065 – 251128
E-mail: outapitc@iway.na

P. O. Box 853
OUTAPI

INTERNAL MEMORANDUM

To	Mr Ausiku Bonifatius Senior Manager Infrastructure Planning and Technical Services Outapi Town Council
From	Mr Kalipi PPA Informal Settlement Clerk Outapi Town Council
Date	15 December 2021

RE: SUBJECT MATTERS TO BE DISCUSSED AT OUKWA-WANANYANGA EXT 13

INTRODUCTION

Issues raised at the last meeting

- Affected residents pleading to be assisted with few materials like nuts and poles
- Affected residents pleading Council to fast track the process of providing basic services e.g. water, public Toilets and Electricity at the area residents are to move.
- Consideration to be made on residents that had water and electricity at their current traditionally allocated plots, Do they get to be compensated?

DISCUSSION

Since it has been noted that there were so many shacks illegally put up without council approval and that there is no proper documentation presented to council regarding how the shacks were allocated, decision have been made that no compensation will be made and the affected residents to rather move to the new allocated plots.

Currently Council is busy servicing Oukwa-Wananyanga with fresh water, hence it has been noted that Council is finding difficulties to service the proposed area as many affected residents that were allocated and supposed to move didn't move till to date therefore the service pipe lines have nowhere to pass through as there are existing shacks in the streets.

Council is trying at its level best to bring all kinds of services in EXT 13 including electricity therefore those having shacks with electricity, the issue has been considered and Council is in the process to find means on how to bring electricity closer to the allocated plots

CONCLUSION

Affected residents are encouraged to pave way for the new development else it will delay the service delivery process. Secondly the allocated residents are again reminded to move to their new plots, the 6 month period given has lapsed therefore any given time of point Council will be left with no option but to revoke all the undeveloped plots and re-allocate to those in the waiting list.

Regards

PUBLIC INPUTS ON THE COMPENSATION POLICY FOR COMMUNAL LAND

Outapitc

From: Theodore Silumbu <tsilumbu@murd.gov.na>
Sent: Friday, June 17, 2022 12:33 PM
To: info@gobabis.org; jenniky1990@gmail.com; ksinvula@gmail.com; wdantu@grootfonteinmun.com.na; secretary.council@hbaymun.com.na; Frieda.neshuku@hbaymun.com.na; ceosec@keetmansmunicipality.org.na; pnghiwilepo@marmun.org.na; nunda@okahandja.org.na; toini@okahandja.org.na; ceo@omamuni.org.na; almuth@otjimun.org.na; outmun@mweb.com.na; jaurib@outjomun.com.na; Yolande@outjomun.com.na; mswarts@swkmun.com.na; swkmun@swkmun.com.na; hkasite@tsumebmun.org.na; lcoetzee@walvisbaycc.org.na; nyb@windhoekcc.org.na; mhn@windhoek.org.na; pa2ceo@atc.com.na; ronaldmura69@gmail.com; nghifikwal@eenhanatc.org.na; i.ipinge@helaonafidi.org; martha@helaonafidi.org; rliswaniso@kmtc.org.na; goreseb@karibibtown.org; pa2ceo@karibibtown.org; pa2ktc@gmail.com; ceo@ltc.com.na; daisy@ltc.com.na; nkutown@iway.na; info@okahaotc.com.na; cthomas@ormdtc.com.na; "'okakararatc.@gmail.com'"@eurus.mrlgh.gov.na; okakararatc@gmail.com; viimpumbu@gmail.com; viimpumbu@omuthiyatc.org.na; ceoadmin@ondangwatown.com; tiithete@ondangwatc.org.na; degumbo@otc.com.na; mniipele@otc.com.na; aiipinge@oniipatc.org.na; opuwotc@gmail.com; info@opuwotc.org.na; Helena.Thomas@oshtc.na; outapitc@iway.na; fillipusshililifa@yahoo.com; cshilongo@oshikukutc.org.na; amuranda@otavitown.org.na; ceo@rehobothtowncouncil.org.na; claasena@rehobothtowncouncil.org; nekaro@rundutown.org; munango@rundutown.org; ruacanaceo@ruacanatc.org; enanyeni@me.com; karasburgm@iway.na; receptkrgtc@iway.na; ilombardt@gmail.com; aroabvc@iway.na; councilberseba@gmail.com; bethanievc@bethanievc.com.na; MenatzickM@ra.org.na; amaghumbo@divinduvc.com.na; amaghumbo@divunduvc.com.na; silasmonica97@gmail.com; gochasvc@gmail.com; rsitanga72@gmail.com; AccKalkvc@iway.na; eveaebes@gmail.com; urisbianca@yahoo.com; koesvc@iway.na; koesvcfinance@gmail.com; leonard@iway.na; maltacouncil@iway.na; gaingosv6@gmail.com; info@okongovc.com.na; anamwele@okongovc.com.na; zakaapi@yahoo.com; melba291456@gmail.com; jarsoncarla@gmail.com; tsandisttl@gmail.com; tsescouncil@hotmail.com; secretary.witvleivc@iway.na
Cc: 'Elfriede M Gende'; bvanvyk@murd.gov.na; fandreas@murd.gov.na
Subject: Input on the Draft National Compensation Policy
Attachments: Draft of the National Compensation Policy.pdf

All CHIEF EXECUTIVE OFFICERS– MUNICIPAL AND LOCAL AUTHORITIES

Kindly see attached self-explanatory circular regarding the review of the National Compensation Policy Guidelines for Communal land 2009 for your urgent attention and action.

Kindly please note that it will be appreciated if your comments on the draft Policy can be sent to Ministry on or before the 1st of July 2022.

Regards

Elfriede Gende
Control Administrative Officer
+264 61 297 5195

Ms Julia for SSMM
17/06/2022

Republic of Namibia

Ministry of Urban and Rural Development

Enquiries: Ms. F. Andreas
Tel: (+264+61) 297-5138
Fax: (+264+61) 297-5305

Government Office Park
Luther Street

Private Bag 13289
Windhoek, Namibia

RECEIVED
2022/06/17

CIRCULAR

TO: **HON. REGIONAL GOVERNORS**
HON. CHAIRPERSONS OF REGIONAL COUNCILS
YOUR WORSHIP MAYORS AND
HON. CHAIRPERSONS OF LOCAL AUTHORITY COUNCILS

COPY: **CHIEF REGIONAL OFFICERS – REGIONAL COUNCILS**
CHIEF EXECUTIVE OFFICERS – LOCAL AUTHORITIES
CHIEF ADMINISTRATIVE OFFICER: ARC
CHIEF ADMINISTRATIVE OFFICER: ALAN

SUBJECT: **INPUTS FOR THE REVIEW OF THE NATIONAL COMPENSATION POLICY GUIDELINES FOR COMMUNAL LAND 2009**

As one of the resolutions originating from the 2nd National Land Conference, the Ministry of Urban and Rural Development was directed to cause the review the National Compensation Policy Guidelines for Communal Land 2009 every three (3) years.

In order to ensure an inclusive implementation of the resolution, we are hereby consulting and soliciting inputs from you as the implementers as well as from other stakeholders and the broader public in your region and local authority to identify shortcomings, challenges and required or proposed changes to the existing Policy.

Find herewith a copy of the Draft National Compensation Policy Guidelines for Communal land 2009 for your reference, consideration and inputs. You are kindly requested to prepare one inclusive submission with possible recommendations to enable the Ministry to determine the dates for your oral presentations.

It will be appreciated if your comments on the draft Policy can reach the Ministry **on or before 01 July 2022.** For effectiveness, it is hereby advised that Hon. Governors and Hon.

Chairpersons of Regional Councils in each region should host consultations with and obtain inputs from Local Authorities and other stakeholders in the region, and submit such to the Ministry.

Yours sincerely,

MINISTRY OF URBAN AND RURAL DEVELOPMENT
MINISTER OFFICE
2022-06-15
PRIVATE BAG 13289
WINDHOEK

ERASTUS UUTONI, MP
MINISTER

Cc: Hon. Deputy, Minister, MURD

REPUBLIC OF NAMIBIA

DRAFT COMPENSATION POLICY GUIDELINES FOR COMMUNAL LAND

PURPOSE OF THE GUIDELINE

This guideline:-

1. Explains situations that may give rise to compensation in instances where land is taken for township expansion or other public sector development projects;

2. Gives direction on how compensation shall be determined in instances where communal land is taken by any competent authority;

3. Helps the affected landowners to choose a compensation option they consider to be fair from the two options provided in Part B and C below respectively;

4. Is applicable in cases where an occupant of land within a proclaimed local authority boundary has been occupying the affected land in accordance with the customary laws of the area.

Part A: BACKGROUND

a. The fundamental principle of compensation is to put the claimant in as near as possible to the same position as he or she was before the acquisition or displacement. This principle is applicable to situations where land and improvements are involved, whether it is communal or freehold. It is recognized that for communal land, ownership is vested in the State for the benefit of the community's use whereas in freehold; the landholder has a full legal right to acquire, own or dispose such property.

b. These policy guidelines recognize that:-

(i) Article 16(1) of the Namibian Constitution guarantees all persons the right to property with paragraph 1 thereof providing everyone a right to acquire, own and dispose of property, alone or in association with others and to bequeath such property.

(ii) Article 16 (2) of the Namibian Constitution provide for the expropriation of property by the State or any competent body authorized by law in the "public interest", subject to payment of just compensation and which compensation should be in accordance with the requirements and procedures determined by an Act of Parliament.

(iii) Whereas Section 25 of the Agricultural (Commercial) Land Reform Act, (Act No. 6 of 1995), provides for the payment of just compensation for any commercial agricultural land expropriated or any right in such commercial agricultural land expropriated in accordance with Article 16 of the Namibian Constitution, there are no existing legal procedures to guide in the determination of compensation payable for communal landholders whose property is subject to expropriation by the State or any competent body authorized by law in the "public interest".

(iv) Whereas the Expropriation Ordinance of 1978 (Ordinance No. 13 of 1978) provides for the expropriation of immovable property including a real right in or over immovable property by the State or any competent body authorized by law in the "public interest" and for the payment of just compensation for any such expropriated real right in or over immovable property, subsection 35(1) of the Agricultural (Commercial) Land Reform Act, No. 6 of 1995 stipulates that the provisions of the said Ordinance shall not apply to an expropriation of property for the purposes contemplated in section 14(1) of the Agricultural (Commercial) Land Reform Act, (Act No. 6 of 1995)

(vi) However subsection 35(2) of the Agricultural (Commercial) Land Reform Act No. 6 of 1995 provides that;

"Nothing in this Act (Agricultural (Commercial) Land Reform Act No. 6 of 1995) shall be construed as preventing the expropriation of agricultural land in accordance with the provisions of the Expropriation Ordinance, 1978, for a purpose contemplated in that Ordinance."

c. These policy guidelines have been prepared bearing in mind that:-

(i) Article 17 of the Universal Declaration of Rights and duties of Man of 1948 specifies that everyone has the right to own property alone or in association with others and that no-one may be arbitrarily deprived of property, except where the power to deprive the individual of his right is granted by law and only on justifiable grounds;

(ii) there are currently no legal procedures determined by an Act of Parliament for assessing the amount of compensation payable to an individual deprived of his/her right to own property in communal areas or the right to utilize communal land allocated to him/her by a traditional leader or traditional authority;

(iii) the universally accepted method for assessing the replacement cost of improvements for purpose of determining compensation is the depreciated replacement cost approach;

(iv) the underlying concept behind the depreciation replacement cost approach is to consider the present worth of materials used in a building minus any estimated depreciated value.

d. Bearing in mind the fact that our various environmental legislations no longer permits the cutting down of trees, compensating our people living in communal areas for their improvements based on the reduced cost of current building materials would disadvantage the majority of our people. Many of the families may not be able to rebuild their homesteads elsewhere, again.

e. In the light of the aforesaid, the basis for determining the amount of compensation payable for materials used to construct traditional building structures in communal areas shall disregard the element of depreciation. Therefore the prevailing replacement value of new materials shall be used instead.

USE OF COMMUNAL LAND

f. The right to use communal land can be equated to a usufruct which is a personal servitude that entitles one person to use another person's property in such a way as to preserve its substantial character and to enjoy the fruits therefrom for a defined period or for the lifetime of the user.

g. The relevant traditional authorities and the community in general have control over the allocation and use of the land, but it is recognized that they do not own it; neither do they enjoy leasehold rights over the land.

In essence therefore, the communal farmer has the right to administer the land for his own benefit until that right ceases or is extinguished by the death of the user.

Part B: COMPENSATION IN MONEY AND ERVEN

AIM

The purpose of this option is to allow a communal landholder whose land is incorporated into a town land jurisdiction or has been taken for other public sector development purposes, the choice to either:-

a) own a residential erf in the proclaimed town; or

b) subject to availability, be given alternative land of similar size as the one which has been taken away from them in order to continue with their farming activities.

c) In cases where no land of similar size is available, the landholder shall be provided with reasonable land.

Option 1	*Applicable to affected communal land of more than 500m² on which there is a homestead, cultivated land, uncultivated land and any other improvements.*

1. Two residential erven measuring at least 500m² each in size not exceeding 1000 square meters each to be transferred to the occupant's name free of charge.
2. One of the erf shall be where the present homestead is located.
3. The other erf shall be adjacent to the first erf indicated in (2) above or any other available erf which the owner can sell ("voetstoots")
4. The acquiring authority to provide both erven with municipal services i.e. water supply 2and or electricity free of charge, where applicable, and the owner of the erven shall pay for use of the services provided.
5. Other improvements affected by the acquisition or displacement shall be compensated in terms of Part D below, but shall exclude the improvements remaining on the 500m² erf with a homestead.
6. In case the area where one or both of the erven indicated in (1) above is not zoned for residential use, the affected occupant shall be given alternative residential land, accordingly. In addition, any improvements on the homestead shall be compensated in terms of Part D below.
7. Should a person elect this option, the acquiring authority or any other relevant ministry, line ministries or traditional authority shall not be compelled to provide the beneficiary with any alternative land elsewhere, in addition to the one granted under this option.

PART C: PROVISION OF ALTERNATIVE LAND IN THE COMMUNAL AREAS FOR FARMING PURPOSES

Option 2	*Applicable to affected communal land of less than 500m² on which the improvements are of a permanent or temporary nature which are utilized for other purpose including dwelling.*

1. For structures constructed of corrugated iron materials which are not of a permanent nature, a cash amount as determined by the Government Valuer and the acquiring authority shall provide transportation.

2. For conventional buildings (Brick walls, IBR roof, grano or tiled floors) N$3, 000/m² (as determined by the Government Valuer) to be adjusted depending on the quality, condition and workmanship of the building structure as determined by a Government Valuer and the acquiring authority shall provide transportation.

3. The Government Valuer shall adjust the amount indicated in 1 and 2 above, accordingly, to reflect the prevailing market rates at the time of assessment and shall recommend the adjustment value to the line Ministry.

4. If there are fruit-bearing trees or cultivated land in addition to permanent or temporary structures the amount of compensation shall be determined in terms of Part D below.

Option 3	Applicable to person who opt to be given alternative **land** elsewhere in order to continue with their farming activities.

1. The government shall strive to provide the affected person with alternative land of similar size as the one which has been taken away from him, but subject to availability.

2. Ideally, the government shall strive to provide the alternative land within the same traditional authority jurisdiction. However should the land be insufficient or not be available, the affected person may be relocated to other traditional authority area where there is land in consultation with the relevant Traditional Authorities.

3. In addition, the affected person shall be compensated for being deprived of the right of use of the land and other improvements in terms of Part D below. the acquiring authority shall provide transportation.

PART D: DETERMINATION OF COMPENSATION FOR LAND, IMPROVEMENTS AND DISTURBANCE

1. CULTIVATED LAND

Land	Current amount (N$)	Proposed amount (N$)
Cultivated land	N$600.00 (10 000.00)/ha	N$5 000.00 (17 500.00)/ha (in line with Namibia inflation rate of 15% per annum)

a. Government recognizes the extent to which prior preparation of land is necessary before it can be rendered ready for cultivation. Physical obstacles where they exist have to be removed, de-bushing done and the surface soil levelled and prepared, where necessary.

b. Compensation on cultivated land shall be based on the cost of preparing virgin land per hectare to the point where it is ready to have crops planted. The estimated average cost of preparing land for cultivation is roughly the same per hectare for both commercial and communal farming land.

c. As the current rate for land preparation in commercial farming areas is pegged at (as per market value)

d. As the current rate for land preparation in communal farming areas is pegged at (as per market value) N$17 500.00/ha as indicated in the table above.

A Government Valuer shall review the amounts(rates) indicated above on a regular basis to reflect prevailing market rates for purposes of determining the amount of compensation payable to an affected person.

2. GRAZING LAND/UNCULTIVATED LAND

Land	Current amount (N$)	Proposed amount (N$)
Uncultivated land (Land with cultivation potential)	N$250.00(3 700.00)/ha	N$2 500.00(4 300.00)/ha 15% per annum

a. In cases where grazing land shared by the communal farmers is affected, no compensation shall be paid to any person.

b. Where uncultivated land with the potential for cultivation is demarcated within a homestead in terms of the appropriate statutes, and is utilized for grazing purposes, a rate (at a rate as determined by the Government Valuers) of N$2 500/ha shall be paid.

c. A Government Valuer shall review the amount indicated above on a regular basis to reflect prevailing market rates for purposes of determining the amount of compensation payable to an affected person.

3. STRUCTURES

a. The following amounts shall apply in respect of structures

Structure	**Current Rate (N$)**	**Proposed Rate (N$)**
Homestead enclosures with strand wire, poles and droppers	N$70/m	N$105/m
Home stead enclosed with wooden poles only	N$60.00/m	N$90.00/m
Huts with pole walls, grass roof and earth floor	N$100.00/$m^2$	N$150.00/$m^2$
Huts with mud-brick walls, grass roof and earth floor	N$150.00/$m^2$	N$225.00/$m^2$
Huts with cement brick walls, grass roof and earth floor	N$180.00/$m^2$	N$260.00/$m^2$
Huts with cement brick walls, grass roof and concrete floor	N$200/$m^2$	N$300.00/$m^2$
Corrugated structures	N$50.00/$m^2$	N$75.00/$m^2$
Conventional building (brick wall, IBR roofing, concrete floor)	N$400/$m^2$	N$3 000/$m^2$ depending on the quality of finishes, condition and workmanship of the building structures as determined by a Government Valuer.
Cattle kraals, goat pens, pig pens made of with strands, poles with or without droppers	N$70.00/m	N$105/m
Cattle kraals, goat pens, pig pens made of wooden poles only	N$60.00/m	N$90.00/m
Enclosure fencing of the entire property	N$50.00/m	N$75.00/m
Well (Located in soft soils)	N$0.00	N$20/m

Well (Located in hard soils)	N$0.00	N$50/m
Other structures, Boreholes, Water tanks, etc	N$0.00	Amount payable to be assessed and determined by a Government Valuer.

b. The above amounts shall be subject to changes in line with inflation. Therefore the Government Valuer shall review these amounts on a regular basis using the Consumer Price Index (CPI) rate to reflect prevailing market prices. (i.e. Apply a time and inflation adjustment to these amounts).

c. In determining the replacement value of materials used to construct traditional building structures in communal areas, the Valuer shall disregard the element of depreciation.

4. FRUIT-BEARING TREES

a. Compensation for fruit-bearing tree shall be calculated as follows:

Value of tree at maturity = Estimated fruits per season (or litres) X Unit price X Maturity Period

Local/ Common name	**Scientific / Botanical name**	**Estimated fruits per season**	**Estimated quantity sold**		**N$/ Fruit/ liter of a drink/kg**	**Total price per season**	**Estimated maturity in yrs**	**Tree value at maturity**	**Main products**
			Kg	**Liter**					
Exotic fruit trees									
Mango	*Mangifera indica*	150			6	900	5	4500	fruit
Citrus/Lemon		180			5	900	5	4500	fruit
Orange		180			7	1260	5	6300	fruit
Guava	*Psidium guajava*	200			1.5	300	5	1500	fruit
Pawpaw	*Carica*	20			12	240	5	1200	fruit

	papaya								
Grape	*Vitis vinifera*		40		30	1200	3	3600	fruit
Banana	*Musa acuminate*	60			5	300	3	900	fruit
Peach	*Prunus persica*	50			5	250	5	1250	fruit
Mulberry	*Morus rubra*		80	25	20	500	3	1500	Fruit/jam
Apple	*Malus domestica*	60			3	180	5	900	fruit
Date palm	*Phoenix dactylifera*	500					5	1700	fruit
Avocado	*Persea american a*	60			10	600	5	3000	fruit
Indigenous fruit trees									
Marula	*Sclerocarya birrea*		300	150	15	2250	15	33750	Wine/Omagongo/oil/medicine (roots and leaves)
Fig tree	*Ficus sycomorus*		200	40	15	600	15	9000	Dry Gin/Owalende
Omuve/Birdplum	*Berchemia discolor*		50	20	60	1200	15	18000	Fruit/Gin/dye for palm leaves (omapi)
Omwandi/Jakkalsbessie/African ebony	*Diospyros mespiliformis*		80	25	70	1750	15	26250	Dry Gin/Owalende
Omulunga/Makalani/Palm	*Hyphaene petersiana*	100		25		1700	15	25500	
Mangetti/Omunghete	*Schinziophyton rautanenii*	950	300	150	10	1500	25	17000	fruit
Buffalo thorn/Omukeketee	*Ziziphus mucronata*		80	25	10	1700	10	17000	Fruit/ombike
Corky mokey orange/Omuuni	*Strychnos cocculoides*	200	100	80	3	600	15	9000	fruit
Omupwaka	*Strychnos pungens*	200	100	80	3	600	15	9000	fruit
Usivi/False mopane	*Guibourtia coleosperma*		40		20	800	20	16000	Fruit/timber

Boabab/Omukwa	*Adansonia digitata*	80			7	560	15	8400	Fruit
Sugar plum/Mahobohobo	*Uapaca kirkiana*	400	100		5	500	15	7500	fruit
Sugar apple	*Annona squamosa*	200	200		3	600	7	4200	fruit
Sourplum	*Ximenia caffra*		30	15	25	400	7	2800	Oil/kernel
	Azanza garckeana		50		10	500	10	5000	fruit
Mobola plum	*Parina curatellifolia*		30		10	300	15	4500	fruit
Omumbu	*Vangueria species*		10		20	200	15	3000	fruit
Moringa/Drumstick tree	*Moringa oleifera*		20		150	3000	4	12000	medicine
Prickly pear/Cactus	*Opuntia ficus-indica*		40		20	800	4	3200	fruit
Uguva/Omuuva/Kiaat	*Pterocarpus angolensis*						60	12000	timber
Camel thorn/Omwoonde	*Acacia erioloba*		120		5	600	20	12000	pods
Lead Wood/Omukuku	*Combretum imberbe*						20	12000	Woodcarving/ medicine/Gums
Mopane	*Colophosphermum mopane*						5	5000	wood
Purple-pod Terminalia/Omuhama	*Terminalia prunoides*						7	12000	Fodder
Kalahari apple-leaf/Omupanda	*Lonchocalpus nelsii*						5	10000	Woodcarving/fodder
Poison grub commiphora/Omukanga	*Commiphora africana*						8	10000	Woodcarving, medicine
Shepherd's tree/Omunkuzi	*Boscia albitrunca*						5	5000	Wood, medicine, fodder, roots pounded to make porridge, also used to

									preserve fermented milk

b. On commencement of these guidelines, the quantities and rates indicated hereunder shall be applied:-

c. The above amounts shall be subject to changes in line with inflation. Therefore the Government Valuer shall review these amounts on a regular basis either using the prevailing Consumer Price Index (CPI) rate to adjustment to these amounts or the prevailing market price of the fruits.

d. In determining the value of fruit-bearing trees, only the value of the edible fruits derived thereof shall be considered.

5. DISTURBANCE ALLOWANCE

a. There shall be additional allowance added to the total amount payable in terms of this policy guideline which shall equal to 15 per cent of such total amount, but shall not be more than N$15 000, calculated in accordance with the following formula:

Total Compensation X 15 % of Total Compensation = Disturbance Allowance

if;

[i] the total compensation amount payable does not exceed N$100 000;

plus

[ii] five per cent of the amount by which it exceeds N$100 000, if it does not exceed N$500 000;

plus

[iii] three per cent of the amount by which it exceeds N$500 000, if it does not exceed N$1 000 000;

plus

[iv] ~~one per cent (but not amounting to more than N$15 000) of the amount by~~ which it exceeds N$1 000 000.

b. In determining the amount of compensation to be paid for property affected and or expropriated, the following considerations shall apply, namely-

[i] if the value of the property was enhanced in consequence of the use thereof in a manner which is unlawful such enhancement shall not be taken into account;

[ii] improvements made after the date of notice on or to the property in question, except where they were necessary for the proper maintenance of existing improvements or where they were undertaken in pursuance of obligations entered into before that date, shall not be taken into account;

[iii] no allowance shall he made for any unregistered right in respect of any other property or for any indirect damage or anything done with the object of obtaining compensation therefor;

[iv] any enhancement or depreciation, before or after the date of notice, in the

value of the property in question, which may be due to the purpose for which or in connection with which the property is being expropriated, or which is a consequence of any work or act which the State may carry out or perform or already has carried out or

performed or intends to carry out or perform in connection with such purpose, shall not be taken into account;

6. MATTERS INCIDENTAL

1. The Ministry of Lands and Resettlement, Regional & Local Council authorities and the Traditional Authorities be requested to assist in the identification of available land for the relocation of people where necessary, especially those people who want (to continue with subsistence farming) cultivated land.

2. Local Authorities are also cautioned to control land users in their Local Authority areas to prevent illegal settlement problems.

3. Local Authorities should enter into rental agreements with small farmers in their areas on the basis of payment for the use of land and termination of contracts as and when needed for development purposes, provided the claimants had been fully compensated before.

4. Traditional Authorities should not allocate land in any Local Authority Area because this is exclusively the right of the Local Authority to administer for the benefit of the town and its inhabitants.

5. As a principle, where possible, affected people should be offered an equal size of land elsewhere to continue producing their food. This should be done in consultation with line ministries, Regional Councils and Traditional Authorities.(insert land resolution)

6. Councils to consult the Ministry (responsible for Local Authorities should make provision for basic services as water and other necessities)of Regional & Local Government, Housing & Rural Development(, Ministries of Lands and Resettlement, Agriculture, Water and Forestry and other relevant line ministries on the provision of basic services such as water and other necessities to ensure that those relocated are not adversely affected by the process.

7. Cabinet approves that O/M/As make budgetary provisions in order to implement the new policy and Councils are requested to provide accurate estimate of funds required.

8. Cabinet approves that this policy be applied with effect from .2022

SAMPLE CONSENT FORM

Consent Form/Ombapila yetsokumwe, ile yoku itaela opo uyamukule omapulo gomulongwa gena sha neilongo lye

Title of research project:

Contemporary Domesticity and the Architecture of Urbanizing Northern Namibia: the Case of the Owambo Traditional Homestead.

Names of principal researchers: Edhina lyomukonaakoni nenge lyomulongwa

Elao Martin

Department/research group address: Ondjukithi yOshikondo sheilongo

Department of Architecture and Spatial Planning Oshikondo shokufaneka omatungo noshowo omahala momikunda ile meendolopa

Telephone: onomola yongovi yomulongwa

+264 61 207 2702

Email: ondjukithi yopamashina

emartin@nust.na

Name of participant: Edhina lyomukuthimbinga, pa kuyamukula omapulo

Nature of the research: Oludhi lwekonaakono tali ningwa pailongo

Spatial research of household comprising of ethnographical observation on domesticity and socio spatial activities in household. The research will also include semi structured interviews, photophraphs and sketches. Ekonaakono pailongo lina sha nonkalo yomamaumbo ya guma elunduluko lya etwa kehumokomeho lyeendolopa. Ekonaakono ndika otali ka kwatelamo omapulo go semi structured interview, okukutha omafano, nokufaneka paunongo.

Based on the standard consent form of the British Patient database for research and training, www.patsy.ac.uk/www/Consent.doc.

Participant's involvement: Oshitopolwa shina sha nana kukutha ombinga, meyamukulo lyomapulo / nenge oku kwathela omwiilongi nguka:

What's involved: Risks: None Kapena sha shoku etela omuyamukuli oumbanda, nenge omatilo

Benefits: the research outcomes will be used to propose more responsive urban planning practices to the existing practices on the ground in these communities
Iizemo yekonaakono ndika otayi ka longithwa oku gandja omayele nenge ondunge faneko yili hwepo ngele tashi ya pamafaneko geendolopa tadhi gumu aakalimo yomomikunda.

Costs: None Kapena ofuto yasha to yi pulwa ngele wa yamukula omapulo ngaka

Payment: None Kapena ofuto yasha to yi pewa ngele wa yamukula omapulo ngaka

Use of Information collected: all information collected in the form of drawings, photographs text and audio recordings will be used purely for academic purposes and will not be shared with a third party. The information will also be stored securely

Uuyelele auhe wa monikwa, nenge wa gongelwa pamafano, panyolo ile paungomba mekonaakono ndika lyomailongo, otau ka longithwa ashike nelalakano lyeilongo, na inau pitikwa okupewathana nomunhu omutitatu.

- I agree to participate in this research project.

Onda pitika/ itaala/ tsakumwe opo ndi kuthe ombinga moprojeka yomwiilongi nguka sho tandi yamukula omapulo ge.

- I have read this consent form and the information it contains and had the opportunity to ask questions about them.

Onda lesha ombapila yofoloma ndjika, nuuyelele ulimo nonda mono wo ompito olupula kehe shonda hala okuuva nawa, kombinga yawo.

- I agree to my responses being used for education and research on condition my privacy is respected, subject to the following:

Onda itaala/uvathana opo omayamukulo gandje ga longithwe melongo nomekonaakono tali ningwa keilongo ndika, shaa ashike kutya paumwene onda simanekwa, nomayamukulo gandje oga gamenwa ngashi tashi landula:

- I understand that no sensitive personal details pertaining to private family matters will be used whether in the form of text, photographs or audio recordings

Ondi uviteko nenge osha yelelange kutya kapena uuyelele uuwinayi wopaumwene unasha noiholekwa yeumbo lyetu tau ka longithwa moshinyolwa shika, nenge pamafano ile tau pulakenua paungomba.

Uuyelele auhe wa monikwa, nenge wa gongelwa pamafano, panyolo ile paungomba mekonaakono ndika lyomailongo, otau ka longithwa ashike nelalakano lyeilongo, na inau pitikwa okupewathana nomunhu omutitatu.

Uuyelele mbuka otau ka pungulwa pehala lya gamenwa lyoshiputudhilo shopombanda hashi ithana NUST.

- I understand that I am under no obligation to take part in this project.

  Ondi shi uviteko kutya kandina oshinakugwanithwa shasha shekutho mbinga moprojeka ndjika

- I understand I have the right to withdraw from this project at any stage.

Ondi shi uviteko kutya ondina uuthemba okwiikuthamo meyamukulo lyomapulo ngaka ngele nde shi hala

Signature of Participant:

Eshaino / eshango lyana kukutha ombinga / nenge lyomusilishimpwiyu gwe (ngele eli kohi yeevula omulongo nahetatu):

_____ Name of Participant:

Edhina lyana kukutha ombinga / nenge omusilishimpwiyu gwe:

_____ Signature of person who sought consent/ Eshaino lyaango ta kongo euvathano nenge etsokumwe:
_____ Name of person who sought consent/ Edhaina lyaango ta kongo euvathano nenge etsokumwe:
_____ Signatures of principal researchers/Eshaino lyaango omukuluntu mekongo lyuuyelele meilongo ndika: a)_____ (name) (Edhina)

b) _____ (name) (Edhina)
c)_____ (name) (Edhina)

Date / Esiku: _____

Based on the standard consent form of the British Patient database for research and training, www.patsy.ac.uk/www/Consent.doc.

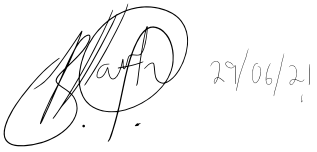

CONSENT FROM THE TRADITIONAL AUTHORITY

OMBALANTU TRADITIONAL AUTHORITY

Tel: 065 – 251062 www.ombalantu.org P.O.Box 437
Fax: 065-251315 Outapi
Enquiries: Ms. A. Shilimetindi 26/04//2021

Elao Martin
Faculty of Natural Resources and Special Sciences
Namibia University of Science and Technology

AUTHORISATION TO CONDUCT THE RESEARCH ON THE OSHIWAMBO TRADITIONAL HOUSEHOLDS IN OMBALANTU TRADITIONAL AUTHORITY'S AREA OF JURISDUCTION ONLY.

The Ombalantu Traditional Authority has granted an authorisation to Mr. Elao Martin to conduct the Research on Oshiwambo Traditional Households in the Ombalantu Traditional Authority's area of Jurisdiction only (means in Ombalantu). To that end, the households are requested to assist Mr. Elao to enable him complete his research.

EPITIKILO LYO KUNINGA OMAKONAKONO YEILONGO

Ombelewa ye lelo lyopamuthigululwakalo lyaMbalantu oya gandja epitikilo ko muna sikola qwe dhina Elao Martin opo aye komeho nomakonakono yo pailonga ye nasha nelunduluko lyo maumbo go pamuthigululwakalo sheikwatelela nenge asheetwa kehumokomeho lyeendolopa. Aakwashiwana amwiindilwa opo mumukwathele oku yamukula omapulo yaye.

Tangi unene kelongelokumwe.

ELELO LYOSHILONGO
OMBALANTU
OMUSATI REGION
26 -04- 2021
OMBALANTU TRADITIONAL AUTHORITY
P.O. BOX 437 OUTAPI
TEL: 065 - 251 602

Yours Sincerely,

.....
TK. OSWIN SHIFIONA MUKULU
CHIEF OF OMBALANTU TRADITIONAL AUTHORITY